AMATEUR RADIO

JUNE 1990 RRP $3

SPECIAL TEST EQUIPMENT ISSUE

WIRELESS INSTITUTE OF AUSTRALIA

THE WIA RADIO AMATEUR'S JOURNAL

KENWOOD

KNOCKOUT DUAL-BAND DUO!

TM-731A

The Kenwood TM-731A redefines the original Kenwood term "dual bander". The wide range of innovative features include a dual watch function, selectable full duplex operation, automatic band change, 30 memory channels, large dual LCD displays, programmable scanning, and 50 watts of output on 144 MHz and 35 watts on 430 MHz.

The optional RC-10 multi-function handset remote controller is also available, making the TM-731A even more enjoyable to operate.

Features:

- Ultra Compact design with easy to install mount.
- Multi function microphone with programmable function key.
- High sensitivity receiver and an improved antenna switching circuit for wide dynamic range.
- Hi/Lo power switch for power reduction to 5 watts when high power not needed.
- Dual watch function to receive both 144 MHz and 430 MHz bands at the same time.
- 30 Memory channels with Lithium battery backup.
- Various scan modes are provided including band scan, programmable band scan, memory and dual scans.
- Frequency lock function prevents accidental loss of selected frequency.
- Dual frequency selector may operate independently of each other for main and sub-bands.
- Sliding balance controls audio output between main and sub-bands.
- Easily selectable dual and single band operations.
- Large amber multi-function LCD display for best visibility in sunlight or after dark.
- Built-in selectable CTCSS Tone Encoder

TH-75A

The TH-75A combines the 2m and 70cm bands together into one compact, feature-filled hand-held package. Large dual LCD displays, dual watch, selectable full duplex operation, tone alert and many additional features make this dual band HT different from the rest.

Features:

- Dual watch function allows you to receive both VHF and UHF bands at the same time.
- Built in 2 VFOs for main and sub-bands.
- Large multi-function LCD display provides excellent visibility.
- Tone Alert System for both bands causing a beeper tone to signal the presence of an incoming signal.
- Automatic band change function changes between main and sub-bands when a signal is present.
- Selectable dual and single band operations.
- Five watts RF output is available when operated with 13.8 VDC.
- Balance control for main and sub-band audio output.
- 10 Multi-function memory channels plus call channel for each band, with lithium battery backup.
- Various scan modes are provided including band scan, programmable scan, memory and dual scan.
- Auto battery saving circuit increases battery life.
- Auto-power off function.

KENWOOD ELECTRONICS AUSTRALIA PTY. LTD.
(INCORPORATED IN N.S.W)
4E Woodcock Place, Lane Cove, N.S.W. 2066, Australia
Ph. (02) 428 4222, (02) 428 1455, Fax (02) 427 6869
Call now for further information and the name of your nearest authorised Kenwood dealer.

Please phone, mail or fax for information

Name _____

Address _____

_____ Postcode _____

Publication _____ Issue _____

Model _____

AMATEUR RADIO

THE WIA RADIO AMATEURS JOURNAL

Vol 58 No 6 ISSN 0002-6859 June 1990

Amateur Radio is published by the Wireless Institute of Australia, as its Official Journal on the last Friday of the previous month.

EXECUTIVE EDITOR
Bill Rice VK3ABP

MANAGING EDITOR
Graham Thornton VK3IY

NEWS EDITOR
Jim Linton VK3PC

SENIOR TECHNICAL EDITOR
Peter Gibson VK3AZL

TECHNICAL EDITORS
David Brownsey VK4AFA
Don Graham VK6HK
Evan Jarman VK3ANI
Peter O'Connor VK4KIP
Gil Sones VK3AUI
Phil Steen VK4APA
Roy Watkins VK6XV

DRAFTING
Vicki Griffin VK3BNK

MARKETING
Bruce Kendall VK3WL
Norm Eyres VK3ZEP

ADVERTISING
Ann McCurdy

All contributions and correspondence concerning the content of Amateur Radio should be forwarded to: -
The Editor
Amateur Radio
PO Box 300
Caulfield South
VIC 3162

Registered Office
3/105 Hawthorn Road
Caulfield North VIC 3161

Telephone: (03) 528 5962
(03) 523 8191
Fax: (03) 523 8191
(Non dedicated line)
Business hours: 9.30am to 3pm weekdays

Deadlines

	Editorial	Hamads
July	8/6/90	11/6/90
Aug	9/7/90	11/7/90
Sept	6/8/90	8/8/90

Delivery of AR: If this magazine is not received by the 15th of the month of issue, and you are a financial member of the WIA, please check with the Post Office before contacting the registered office of the WIA.

© Wireless Institute of Australia 1990

CONTENTS

Technical

A Microwatt RF Power Meter 8
Ron Cook VK3AFW
A Simple Inexpensive RC Bridge 16
J A Gazard VK5JG
Getting more from your Oscilloscope 10
Ivan Huser VK5QV
Novel Polarity Tester 9
Trevor Sherrard VK4ATS
A Simple Dip Meter 12
Drew Diamond VK3XU
Level and Frequency on one Meter 17
Ken Kimberley VK2PY
Recycled Connector Current Tester 20
Steve Mahony VK5AIM

General

Introducing the New Minister 27
Jim Linton VK3PC
Newcastle Earthquake Disaster 22
Peter Greenwood VK2IW
Not More of the Use It or Lose It Syndrome 20
Peter McAdam VK2EVB
Twenty-Five JOTA Badges that Otherwise Would not have Been Gained 18
Ken Westerman VK5AGW

Book Review

All About VHF Amateur Radio 27
Jim Linton VK3PC

Operating

Contests
Sunshine State Jack Files Memorial Contest rules 30
Seanet World Wide DX Contest 1990 rules 31

Columns

Advertisers' Index 56
ALARA 41
AMSAT 36
Club Corner 46
Divisional Notes
Forward Bias. VK2 Notes 44
5/8 Wave 45
Editor's Comments 2
FTAC News 39
Hamads 54
HF Predictions 52
How's DX 32
Intruder Watch 40
Morseword No 39 46
Over To You - Members' Opinions 49
Pounding Brass 36
QSLs from the WIA Collection 47
Silent Keys - Obituaries 48
Spotlight on SWLing 39
VHF/UHF An Expanding World 34
WARC 92 Update 43
WIA Directory 2, 3
WIA News 3

Cover

For most of us, the prospect of owning our own Spectrum Analyser is a wild pipe-dream. Now, the VOS-107 Spectrum Probe opens up an entirely new concept. This simple-to-use high input impedance probe, combined with a CRO of at least 1MHz bandwidth, performs as a Spectrum Analyser over the frequency range of 1-100 MHz.

The Probe is priced at $345 excluding sales tax, or $399 including tax. Sales enquiries may be made to Emona Instruments, 86 Parramatta Road, Camperdown (PO Box 15, Camperdown NSW 2050) phone (02) 519 3933 fax (02) 550 1378

Why are we Radio Amateurs?

This is a question I am sure we have all been asked many times. Each time we have probably been able to find a number of reasons, but have we ever tried to analyse in depth what really "makes us tick"? Perhaps this is not the place to try — I have only half a page at the most, and the more I think about it the more I think a book could be written on the theme. But a number of you who read this are perhaps still thinking of becoming amateurs, or you have friends who are interested but would like to know more before they commit themselves to this unique and demanding activity. I prefer not to use the word "hobby", because I feel amateur radio is far more than "just a hobby". Often enough, the word "amateur" also gives the general public a wrong impression, as many of us are quite professional in our abilities but exercise them without expecting to be paid. We are driven by love, not money; the word "amateur" of course literally means "lover".

EDITOR'S COMMENT

BILL RICE VK3ABP EXECUTIVE EDITOR

Imagine then that one of us, visited by a non-technical member of that "general public" is trying to explain our fascination.

"What's that box there? Is it some kind of radio?"

"Yes, it's an amateur radio transceiver."

"Is it two-way, then? Can you talk to people on it? Who?"

"Yes, I can talk to other amateurs." (Across town, around the country, all over the world, depending on the many factors which determine the station capability, and which we then try to explain).

"It all sounds awfully technical. Why can't you talk to them on the phone? It wouldn't cost any more, would it?What do you talk about?"

Further explanation, about relative costs, 10-second DX versus rag-chew contacts, restriction to "unimportant" conversation. If you operate CW, satellites, moonbounce, RTTY or packet, the explanation starts to become really difficult at this stage, and the onset of the proverbial glazed eyeballs and hunted expression is very near! But can we really explain to ourselves what it is that drives us on?

The more I think about all the other areas of amateur activity yet unmentioned (mobile, hand-held, television (fast or slow-scan) computer applications, antennas, design, construction, maintenance, serious DX, VHF, UHF, microwaves; the list goes on and on) the more obvious it becomes that there are probably no two amateurs with exactly the same collection of motivations. Another big area is that of community service (WICEN, ATN etc), and then, of course, all the work involved in running an organisation like the WIA and producing a magazine like this. A complex collection of interests and duties, driven by a mixture of curiosity and obligation, aided at times by determination (or is it pig-headed stubbornness?). Amateur Radio is a challenge, a whole constellation of challenges to do more and better than before. We are radio amateurs because we have accepted those challenges. One is to share our enjoyment by inviting others to join us. You won't regret it!

ar

COPIES OF ARTICLES

Photocopies of any article published in a back issue of AR available to members st $2.50 each (plus $2.00 for each additional issue in which the article appears)

AR ARTICLES
PO Box 300
Caulfield South
Vic 3162

Wireless Institute of Australia

The world's first and oldest National Radio Society - Founded 1910
Representing Australian Radio Amateurs - Member of the International Amateur Radio Union
Registered Executive Office of the WIA: 3/105 Hawthorn Road, Caulfield North, Vic, 3161
All mail to: **PO Box 300, Caulfield South, Vic, 3162** Telephone: (03) 528 5962 (03) 523 8191
Fax: (03) 523 8191 (Non-dedicated line)
Business Hours: 9.30 am to 3.00 pm on Weekdays

General Manager and Secretary: Bill Roper VK3ARZ

EXECUTIVE

President:	Peter Gamble	VK3YRP	**VK1 Federal Councillor:**	George Brzostowski	VK1GB
Vice Chairman:	Ron Henderson	VK1RH	**VK2 Federal Councillor:**	Terry Ryeland	VK2UX
	Kevin Olds	VK1OK	**VK3 Federal Councillor:**	Peter Maclellan	VK3BWD
	Brenda Edmonds	VK3KT	**VK4 Federal Councillor:**	David Jerome	VK4YAN
	Bill Rice	VK3ABP	**VK5 Federal Councillor:**	Bill Wardrop	VK5AWM
Immediate Past President:	David Wardlaw	VK3ADW	**VK6 Federal Councillor:**	Neil Penfold	VK6NE
			VK7 Federal Councillor:	Joe Gelston	VK7JG

FEDERAL CO-ORDINATORS

Amsat:	Graham Ratcliff	VK5AGR	**Int'l Travel Host Exch:**	Ash Nallawalla	VK3CIT
Awards:	Phil Hardstaff	VK3JFE	**QSL Manager (VK9, VKØ)**	Neil Penfold	VK6NE
Contest Manager:	Frank Beech	VK7BC	**FTAC:**	John Martin	VK3ZJC
Education:	Brenda Edmonds	VK3KT	**Federal Tapes:**	Ron Fisher	VK3OM
EMC:	Hans Ruckert	VK2AOU	**Videotape:**	John Ingham	VK5KG
Historian:	John Edmonds	VK3AFU	**WICEN:**	Bill Wardrop	VK5AWM
Intruder Watch:	Gordon Loveday	VK4KAL			

WIA NEWS

EXECUTIVE

54th Federal Convention

This year's Federal Convention differed in two ways from previous years. The location was no longer the Brighton Savoy but, mainly to reduce costs, was at Normanby House, Clayton. And, for the first time, this was not a once-per-year opportunity for inter-Divisional discussion of WIA affairs, but was one of a quarterly series, beginning last year, in which the Divisional Federal Councillors participated as members of an expanded Executive.

Under the new system each quarterly meeting has some of the characteristics of a traditional Convention. This has enabled problems to be dealt with much sooner, and understanding between Divisions to be enhanced. In effect, each meeting has only three months' business to discuss, but the April meeting serves also as the Annual General Meeting which is required by Corporate Affairs legislation.

As has been the custom this Convention began with an informal "rag-chew" session on the Friday evening, which also served as a welcome to our New Zealand observers, Cathy and Brian Purdie, ZL2ADK and ZL2TPS, and Jim Meachen, ZL2BHF.

The formal Convention session began on Saturday morning, after accepting the 1989 minutes, with the presentation of the financial reports, followed by reports from Federal Office Bearers. Most reports, including those published in April Amateur Radio magazine, were accepted with minimal comment.

Those reports which led to discussion were:-

The President's report...

Some items of interest were the current situation regarding disposal items being advertised on Divisional broadcasts, and progress on a reciprocal licensing agreement with Italy.

Region 3 liaison...

This was mainly in connection with preparation for WARC 92, regional policy as regards possible changes to band allocations, and progress of funding to support amateur representation at the WARC.

FTAC...

The only point of contention here was a recommendation by the retiring Chairman, Rob Milliken, VK1KRM, that the number of Australian VHF/UHF record categories be reduced. The report as a whole was accepted, but the recommendation was unanimously rejected. It is understood the new chairman of the Federal Technical Advisory Committee, John Martin, VK3ZJC also prefers to retain

WIA DIVISIONS

The WIA consists of seven autonomous State Divisions. Each member of the WIA is a member of a Division, usually their residential State or Territory, and each Division looks after amateur radio affairs within their State.

Division	Address	Officers			Weekly News Broadcasts	1990 Fees
VK1	ACT Division GPO Box 600 Canberra ACT 2601	President Secretary Treasurer	Ted Pearce Jan Burrell Ken Ray	VK1AOP VK1BR VK1KEN	3.570 MHz 2m ch 6950 70cm ch 8525 2000 hrs Sun	(F) $65.00 (G) (S) $52.00 (X) $39.00
VK2	NSW Division 109 Wigram St Parramatta NSW (PO Box 1066 Parramatta) 2124 Phone (02) 689 2417 Fax (02) 633 1525	President Secretary Treasurer (Office hours	Roger Henley Peter Balnaves David Horsfall Mon-Fri 1100 - 1400 Wed 1900 - 2100)	VK2ZIG VK2CZX VK2KFU	(R Denotes repeater) Times 1045 and 1915 on Sunday 1.845 MHz AM, 3.595 SSB (1915 only), 7.146 AM (1045 only) 10.125 SSB (1045 only), 28.320 SSB, 52 120 SSB 52.525 FM 144.12 (SSB), 147.000 FM(R) 438.525 FM(R) 584.750 (ATV Sound) 1281.75FM (R) Relays also conducted via many repeaters throughout NSW.	(F) $59.00 (G) (S) $47.00 (X) $33.00
VK3	Victorian Division 38 Taylor St Ashburton Vic 3147 Phone (03) 885 9261	President Secretary Treasurer Office hours 0900-1600 Tue & Thur	Jim Linton Barry Wilton Rob Hailey	VK3PC VK3XV VK3XLZ	1.840 MHz AM, 3.615 SSB, 7.085 SSB, 147.250 FM(R) Mt Macedon, 147.225 FM(R) Mt Baw Baw 146.800 FM(R) Mildura, 438.075 FM(R) Mt St Leonard 1030 hrs on Sunday	(F) $65.00 (G) (S) $52.00 (X) $39.00
VK4	Queensland Division GPO Box 638 Brisbane Qld 4001 Phone (07) 284 9075	President Secretary Treasurer	Ross Mutzelburg Eddie Fisher Eric Fittock	VK4IY VK4ABX VK4NEF	1.825, 3.605, 7.118, 14.342, 18.132, 21.175, 28.400, MHz 52.525 regional 2m repeaters and 1296.100 0900 hrs Sunday Repeated on 3.605 & 147.150 MHz, 1930 Monday	(F) $65.00 (G) (S) $52.00 (X) $39.00
VK5	South Australian Division 34 West Thebarton Rd Thebarton SA 5031 (GPO Box 1234 Adelaide SA 5001) Phone (08) 352 3428	President Secretary Treasurer	Rowland Bruce John McKellar Bill Wardrop	VK5OU VK5BJM VK5AWM	1820 kHz 3.550 MHz, 7.095, 14.175, 28.470, 53.100, 145.000, 147.000 FM(R) Adelaide, 146.700 FM(R) Mid North, 146.900 FM(R) South East, ATV Ch 34 579.00 Adelaide, ATV 444.250 Mid North (NT)3.555, 146.500, 0900 hrs Sunday	(F) $65.00 (G) (S) $52.00 (X) $39.00
VK6	West Australian Division PO Box 10 West Perth WA 6005 Phone (09) 474 2626	President Secretary Treasurer	Alyn Maschette Bruce Hedland - Thomas	VK6KWN VK6OO	146.700 FM(R) Perth, at 0930 hrs Sunday, relayed on 3.560, 7.075, 14.115,14.175, 21.185, 28.345, 50.150, 438.525 MHz Country relays 3582, 147.350(R) Busselton 146.900(R) Mt William (Bunbury)147.225(R) 147.250 (R) Mt Saddleback 146.725(R) Albany 146.825(R) Mt Barker Broadcast repeated on 3.560 at 1930 hrs.	(F) $56.00 (G) (S) $45.00 (X) $30.00
VK7	Tasmanian Division PO Box 1010 Launceston TAS 7250	President Secretary Treasurer	Tom Allen Ted Beard Peter King	VK7AL VK7EB VK7ZPK	146.700 MHz FM (VK7RHT) at 0930 hrs Sunday relayed on 147.000 (VK7RAA), 146.750 (VK7RNW), 3.570, 7.090, 14.130, 52.100, 144.100 (Hobart) Repeated Tues 3.590 at 1930 hrs	(F) $63.00 (G) (S) $50.00 (X) $38.00

VK8 (Northern Territory) is part of the VK5 Division and relays broadcasts from VK5 as shown (received on 14 or 28 MHz).

Note: All times are local. All frequencies MHz.

Membership Grades
Full (F) Pension (G)
Needy (G) Student (S)
Non receipt of AR (X)

Three year membership available to (F) (G) (X) grades at fee x 3 times

the full range of categories.

Federal Contest Manager...

It is intended to divide up what has so far been a very onerous task for one person into a five person scheme, each having responsibility for one major contest. Neil Penfold, VK6NE, is still co-ordinating the new arrangements but hopes ultimately to devolve the task completely. The retiring Federal Contest Manager, Frank Beech, VK7BC, will still retain management of the VK-ZL-O Contest. Contest participation seems to be falling in Australia, although rising in the USA. Perhaps the new scheme may restore interest.

Education...

Now that devolvement of examinations is almost complete there was considerable interest in the report by the Federal Education Co-ordinator, Brenda Edmonds, VK3KT. At the 1987 Convention a motion was carried to appoint a paid examination co-ordinator, when it appeared that the WIA might be wholly responsible for the devolved examinations. Now there are many examining organisations, including several of the Divisions, a full-time co-ordinator is no longer needed. One of Brenda's recommendations was to rescind the 1987 motion, and this was unanimously agreed. Brenda's achievements in liaison with DoTC were recognised with acclamation on a motion by Peter Maclellan, VK3BWD.

AMSAT...

Graham Ratcliff, VK5AGR, was not personally present, but his report was accepted enthusiastically. Graham plans to visit West Germany on AMSAT business later this year, partly at his own expense. The possibility of further subsidising his trip from funds intended for IARU travel is to be investigated.

General Manager and Secretary...

Among the points made by Bill Roper, VK3ARZ, in his report was the continued inability of the WIA to fill the vacant position of Federal Treasurer. This problem was discussed briefly, but with the intention of going into more detail later. Stephen Pall, VK2PS, moved that appreciation be shown of Bill's efficiency in managing the WIA's affairs under adverse conditions. This was carried with acclamation.

Following the reports, the Convention was addressed by Alan Jordan, Manager Regulatory, Radio Communications Operations, DoTC, on many items of interest to the Amateur Service. Alan's address included interference investigations, examination devolvement, penalties for infringement of regulations, visitor licensing, spectrum pressures, third party traffic, advertising and updating of regulatory brochures. He answered many questions on these and other topics, informally over lunch as well as in the conference hall.

After Alan Jordan departed in mid-afternoon, the Divisional reports were presented, and there was some discussion arising from the financial and WICEN reports.

Attention was then turned to the previously notified agenda items, of which there were only four this year, due to so much more business being dealt with at the quarterly meetings.

One of these items was simply to formalise the expansion of Executive to 12 members and remove the previous time limits after the Federal Convention on the holding of the first meeting of the new Executive, but the others were more contentious.

90.09.01, proposed by VK4, was aimed at more flexibility in application of State boundaries to Divisional operating areas. Some states saw no problems, others were strongly opposed. In view of the need for thorough investigation it was agreed to defer final consideration until the next full Executive meeting.

90.09.02, proposed by Executive, was to conduct a co-ordinated special recruiting campaign in all Divisions later in 1990. Although there was much discussion, this was eventually carried unanimously.

90.09.03, proposed by Executive, required the Divisions to seek agreement on uniform membership procedures, which again provoked much discussion. Eventually, with minor amendment, this motion was also carried unanimously, although the vote was postponed until Sunday so that delegates could read and discuss Bill Roper's draft document on membership procedures.

The remainder of Saturday afternoon was spent reviewing progress on previous Council resolutions still uncompleted, plus a review by David Wardlaw, VK3ADW, of some aspects of planning for WARC 92.

After dinner there was an informal assessment of progress by the WIA over the last twelve months.

Sunday morning was largely devoted to 90.09.03 as mentioned before, but this was preceded by brief discussion of Divisional trading activities, repercussions on advertising in Amateur Radio and further aspects of examinations of licence candidates in remote areas.

Election of the new Executive brought about few changes. By call signs, with Federal Councillors first, the list is:-

VKs 1GB, 2UX, 3BWD, 4YAN, 5AWM, 6NE, 7JG, 1OK, 1RH, 3KT, and 3ABP, with 3ADW immediate Past President and 3YRP President. There is one vacancy, for which it is hoped a Melbourne-based treasurer may be co-opted soon.

Presentations were made to the visitors from our sister society in New Zealand, the NZART, who responded in kind, and the Remembrance Day trophy for the 1989 contest was formally presented to VK4NEF representing the Queensland Division.

Following the close of the Convention, a meeting of the new Executive was held, discussing the Treasurer vacancy, office work load, Contests and Awards Co-ordinators, WARC 92 preparation, recruiting programs and terms of reference for a review of Divisional and Federal WICEN.

Full minutes of both the Convention and the Executive meeting have been circulated to all Divisions.

Repeater Cross Linking

Members will recall the furore relating to tone access systems for control of cross linked repeaters which erupted late last year. The latest WIA submission on this matter, which was lodged with DoTC on 16th February 1990, was detailed on page 6 of the April 1990 issue of Amateur Radio magazine.

A response to that submission has now been received from Alan Jordan, Manager Regulatory, Radiocommunications Branch, DoTC, and reads as follows:

"I refer to discussions at the last joint Department/Institute executive meeting and to my letter of 10 October 1989 advising of the introduction of a new requirement for the fitment of a tone access system to amateur repeater stations which are cross-linked.

As you will recall, following consultations, the Department accepted the Institute's indicated preference for use of an audible tone burst access system in such situations. At the time it was also agreed that to ensure ready access a single uniform Australian standard should be adopted.

Since promulgation of the new provisions it has become apparent that some concerns exist within the amateur community that more than one form of tone access should be permitted. I also understand that, as a result of further internal consultation, the

Institute has revised its initial position on this aspect.

Accordingly, the Department has reviewed the access arrangements previously announced and I am pleased to advise that the following amended provisions will now apply:-

(i) Fitment of a tone access system shall only be mandatory where an amateur repeater operating in the 146 to 148 MHz repeater band is cross-linked to a repeater operating in another amateur band.

(ii) Only the following internationally recognised tone systems shall be employed for tone access:

(a) Continuous Tone Coded Squelch (CTCSS);

(b) Audible Tone Burst; or

(c) Dual Tone Multi Frequency (DTMF)

The system utilised shall conform to the standard tone frequencies for the relevant system specified in attachment (A) (this table is the same as published on page 8 of April 1990 issue of Amateur Radio magazine).

(iii) Where a tone access system is fitted, it shall be installed such that the cross-link is only activated where the transmission of the relevant tone(s) is detected and only remain active while the originating transmission is present.

Selection of which of the three tone access systems is utilised will be the responsibility of each repeater group concerned. However, information on the type of link access tone system adopted must be made freely available to the amateur community.

The licensee of existing links will be given until 30th July 1990 to comply with the new requirements.

It is recognised that the use of tone access to provide interference protection and/or facilitate control of other special repeater features also offers distinct advantages. The Department has no objections to use of the three tone systems specified for these purposes.

Notwithstanding the flexibility in choice of the tone system to be employed, the Department suggests that to provide a co-ordinated approach, the Institute may care to develop guidelines for standard usage of the new access arrangements.

The relevant paragraphs in Departmental brochure DOC71 will be amended to reflect the revised conditions at the earliest opportunity."

A draft policy setting out WIA guidelines for "standard" usage of the new tone access facilities is in course of preparation, and it is expected to be released for members comment and input in the near future.

Contest Championship Co-incidence

Although the participation in the major WIA HF contests has fallen in recent times, never-the-less contests are still an important and exciting part of the activity of amateur radio, and have been so since the earliest days of organised amateur radio communication.

The WIA sponsors four major HF contests each year:

John Moyle Memorial Field Day Contest

Remembrance Day Contest

VK Novice Contest

VK/ZL/Oceania Contest.

In 1984 an HF Contest Championship competition was introduced on an annual basis. To be eligible for this competition entrants must participate in at least three of the four HF contests sponsored by the WIA. Points are allocated for the top 10 scorers in each State in each of the contests, with 10 points being for the highest score, down to one point for the tenth position. Points are allocated on a State basis to overcome any unfairness due to geographic or propagation advantages which may exist.

There are a number of other rules, some of which overcome the problem where only one 'token' entry appears for a particular category or section

MAGPUBS

A Special Service of the Wireless Institute of Australia

1990 callbooks

Here they are! The latest editions 1990. World-famous Radio Amateur Callbooks, the most respected and complete listing of radio amateurs. Lists calls, license clases, address information. Loaded with special features such as call changes, prefixes of the world, standard time charts, world QSL bureaus and more.

The North American Callbook lists the calls, names and address information for over 500,000 licensed Radio Amateurs in all countries of North America from Canada to Panama, including Greenland, Bermunda and the Caribbean Islands plus Hawaii and US possessions.

The **International Callbook** lists over 500,000 licensed amateurs in countries outside North America. Its coverage includes South America, Europe, Africa, Asia, Australia and the pacific area (exclusive of Hawaii and the US possessions)

Order both Callbooks now and save at these special prices.

When it comes to AMATEUR RADIO QSL's...

it's the ONLY BOOK!

US or DX Listings

WIA288 1990 North American Callbook $58.50 less 10% for WIA Members

WIA289 1990 Internation Callbook $62.50 less 10% for WIA members

Pratical Wire Antennas

Effective HF Designs for the Radio Amateur

Pratical Wire Antennas is a new book from the RSGB by John D Heys, G3BDQ published in 1989. This book has been written for the non-mathematician whose knoledge of this subject has never extended beyond the high school syllabus. It is aimed towards anyone who is capable of passing the Radio Amateurs examination, and the range of antennas described and illustrated are easy to set up and use successfully. There is additional data which will allow experiments and tests with versions that are cut for other bands or designed to fit into difficult locations. The simplified and, it is hoped, easily understood antenna theory is an attempt to allow the newest recuit to amateur radio to learn something about how simple wire radiators work at HF.

7" x 10" **Stock # WIA296 $28.00**

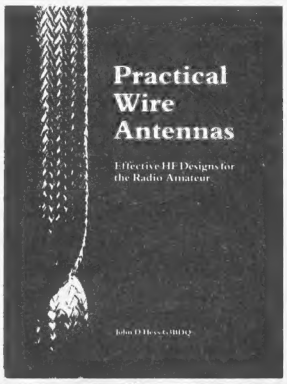

8th Computer Networking Conference 1989

Colorado Springs, Colorodo Oct 7 1989

222 Pages 8" x 11" **Stock # WIA295 $24.00**

SPACE ALMANAC

A galaxy of information! The new **Space Almanac** written by Anthony R. Curtis, K3RXK, editor of Space Today, is an extraordinary book that captures the breathtaking recent news from space, freshly compiled and written. It includes approximately 40 pages on Amateur Radio satellites. The **Space Almanac** is a major handbook featuring most anything you might want to know about Man's trip to the stars. Here's what you get:

- 500,000 words
- 960 pages
- Ten of thousands of facts
- Hundreads of stories, reports and descriptions
- Comprehensive Space history calender
- Lists of future Space plans from around the world
- Scores of tables, charts, maps diagrams, histograms, drawings, photos, callenders, timetables
- Covers Space from Earth to the edge of the Universe in seven major sections: astronauts, space stations, shuttles, rockets, satellites, solar system and deep space

Stock Number BX299 **$40.00**

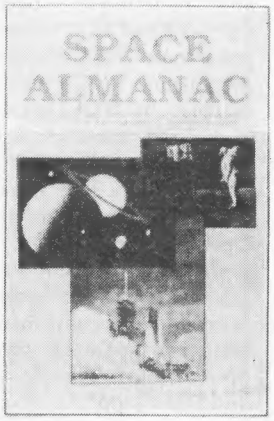

The above books, plus many more, are available from your WIA Divisional Bookshop. All items are less 10% discount for WIA Members and are plus postage and handling where applicable.

If not in stock at your Divisional Bookshop, your order will be taken and filled promptly. Not all publications are available from all Divisions.

from any State.

In 1988, for the first time in the history of the HF Contest Championship, there was a tie for first place in the Phone section. Ken, VK3AJU, with a score of 39 out of a possible 40, and Ian, VK5QX, also with a score of 39 out of a possible 40, were the joint winners.

Guess what? The 1989 HF Contest Championship has produced another draw, and to make the co-incidence even more unusual, the same two amateurs were the tied winners!

Frank Beech, VK7BC, the immediate past Federal Contest Manager, tells me that Ken, VK3AJU, and Ian, VK5QX, both scored 28 points out of a possible 40.

The sad part of this remarkable co-incidence is that Ken, VK3AJU, a keen contester, has now become a Silent Key.

World ITU Day

Did you take the opportunity on 17th May to celebrate the 125th anniversary of the signing of the International Telegraph Convention, the treaty which created the International Telegraph Union, later the International Telecommunication Union (ITU) and the world's oldest intergovernment organisation?

If so you may have contacted stations using the special call sign VK(n)ITU. For some years now DoTC has granted permission for the use of this call sign by WIA Divisions on World ITU Day.

As part of this year's celebrations, the ITU headquarters in Geneva held its first Open Day on Sunday 13 May to show "how the Union's work affects the development of everyday telecommunication facilities such as the telephone, new telematic services and television".

Items in the extensive display included historic telegraph, telephone and radio devices, as well as demonstrations of modern telecommunications and data equipment, and future television systems. Assistance with the display was provided by a number of European organisations as well as nearby amateurs.

Radiation Standards

The April edition of "The Australian Standard", the journal of the Standards Association of Australia, lists its recent publications of standards for a range of equipment and processes. One of the items noted supersedes a 1985 publication on Radiofrequency radiation, specifying limits of exposure of the human body to frequencies in the 100 kHz to 300 GHz range if hazardous biological effects are to be avoided.

This Standard, subtitled "Part 1 -1990", applies to occupational exposure of radiation workers and incidental exposure of the general public. No information is given as to the content of Part 2.

Obituaries

Comparison with other national amateur radio society journals shows that the WIA's journal, Amateur Radio, is the only one which regularly publishes obituaries. The WIA sees these items both as a tribute to those members who have been active in the Amateur Service and as information to other amateurs. These articles contribute to the history and tradition of the both the WIA and the hobby of amateur radio as a whole.

However, with the ever-increasing production costs of Amateur Radio magazine, and the constraints of space availability, the WIA has reluctantly accepted the need to place some limits on this facility.

The present intention is to continue to publish obituaries relating to members, and past members, but only if they are kept to a maximum length of 200 words.

Rather than impose impersonal editing on obituaries submitted for publication which are in excess of this 200 word limit, and so perhaps lose some of the writer's nuances or emphases, it is proposed that these items will be returned to the contributors for reworking to the maximum acceptable length.

It is of course possible that a biography of a noted deceased amateur could become the basis for a short or feature length article for Amateur Radio magazine, a local newspaper or a technical journal.

End of an Era?

Two of the best-known voices in Australian amateur radio, those of Ron Fisher, VK3OM, and Bill Roper, VK3ARZ, are about to disappear from the Divisional news broadcast scene. For over fifteen years these two enthusiasts have produced the "Federal Tapes" which have been a consistent feature of most Divisions' broadcasts.

This system has been used over the years as a way of keeping members up-to-date with news and views from the Federal Body of the WIA. However, with the move towards more direct Divisional involvement and committment in Executive activities, and not least because of the continual criticism of the "Federal Tapes" in recent years by one or more of the Divisions, the time is seen as appropriate for each Divisional Federal Councillor/ Executive member now to be responsible for distributing Federal information within his Division.

Scripts for the Federal news segments in Divisional broadcasts will be provided to each Division from the Executive Office, and it will be the responsibility of the Divisional Federal Councillor to provide this news, plus any further Federal news or comments he may have, to his Divisional broadcast.

However, "Federal Tapes" will not disappear altogether. It is planned that a different type of "Federal Tape" will be produced on an irregular basis in the future to cater for items of special interest, interviews with amateur radio personalities, or reports of special events.

Federal Awards Manager

Recent appeals for a volunteer for the position of Federal Awards Manager, following the untimely death of Ken Gott, have at last paid off. Our thanks go to the six amateurs who offered their services.

After consideration, the position has been awarded to Phil Hardstaff, VK3JFE, who is able to take on all aspects of the position, and is conveniently located to enable close liaison with the Executive Office.

We extend our thanks to Phil, and good wishes for the future with this onerous task.

Members will realise that Awards mail has accumulated unanswered since Ken Gott's death. Please be patient a little longer until Phil can assume complete control and bring all outstanding Awards matters up-to-date.

Please note that all correspondence relating to Federal WIA Awards should be sent to:

The Awards Manager,
WIA Executive Office,
PO Box 300,
Caulfield South,
VICTORIA, 3162.

WIA 80 Award

Although the mail for this award has been accumulating as just mentioned, we understand that activity continues.

Have you made any progress towards gaining your WIA 80 award?

In case you have forgotten, to be eligible, VK amateurs (excluding VK9 and VK0) have to contact or log 80 members of the WIA. A valid contact must include the WIA member's membership number, either that on the membership certificate or the six-digit number on the AR address

label. The time period for the award is from November 1st, 1989 to December 31st, 1990.

For further information on this award, see Page 4 of Amateur Radio magazine for September 1989. Please note, however, that all claims for this award should now be sent to The Awards Manager, c/o WIA Executive Office.

Disaster Communications

A recent "ARRL Letter" describes the activities of the Jamaica Amateur Radio Association during two recent hurricanes, and explains the disaster communications planning in the area. Items noted in the report include the use of the amateur network to provide intercommunication between the various agencies involved, the effectiveness of short written messages rather than wordy verbal reports, a 72 hour moratorium on incoming health and welfare traffic to allow the local networks to concentrate on local needs, and the role of "jump teams".

The "jump team" in this case comprised two amateurs who travelled throughout the disaster area providing technical support for the re-establishment of communications.

Two points were stressed:-

Control of the communications situation belongs with amateurs in the affected area; and

No-one should send teams to an affected area until they are invited by the appropriate authorities.

The "ARRL Letter" also notes moves by the US National Disaster Medical Service to formalise its arrangements with the amateur service.

DOVE OSCAR-17

News reached the Executive Office recently about the breakdown of an On-Board Computer on DOVE-1, and the attempts to reset it.

Eventually, after several days of transmitting the reset sequence through the world's largest privately owned 2 metre antenna, with 32.5 dBi gain and nearly 2 megawatts EIRP, the attempt was successful and testing and commissioning were able to proceed.

Coincidentally, this enormous antenna, belonging to W5UN and used mainly for EME moonbounce, was unfortunately destroyed in a tornado shortly after its use in the AMSAT operation.

Further details about this interesting amateur satellite can be found on page 34 of the October 1989 issue of Amateur Radio magazine.

DoTC Interference Booklet

One of the topics discussed by Alan Jordan, Manager Regulatory, Radiocommunications Branch, DoTC, at the 1990 WIA Federal Convention was the role of DoTC in interference investigations.

Alan commented on the release last year of the booklet "BETTER TELEVISION AND RADIO RECEPTION, YOUR SELF HELP GUIDE", which has been produced by DoTC in an attempt to reduce the number of interference investigations required. The booklet is attractively presented and written in plain English with simple technical terms. Over half of its 55 pages address problems affecting the quality of television reception. Good quality colour photographs make for fairly simple identification of the problem, and the importance of quality equipment, correct usage and an efficient antenna system are stressed.

Other sections deal with interference to AM and FM broadcasts and household electrical appliances, possible cures, and how to ask the Department for help if all else fails. A lift out questionnaire can be used as a check list or completed and forwarded to the Department if necessary. A directory of Departmental addresses is also included.

This booklet is forwarded as a first response to people who contact the Department over reception difficulties, and has been distributed to television/radio technicians and antenna installers throughout Australia.

It may now be purchased for $7.50 from the Australian Government Publishing Service, and would be a very useful addition to every radio amateur's library.

Good Wishes

It has been brought to our notice that Pat, VK2RZ, the immediate past Amateur Radio magazine's "How's DX" column editor, is having a spell in hospital. Pat, best wishes for a speedy recovery from everyone at the WIA. **ar**

AMATEUR RADIO HELPING OUR COMMUNITY

A Call to all Holders of a Novice Licence

Now you have joined the ranks of amateur radio, why not extend your activities?

The Wireless Institute of Australia (N.S.W. Division) conducts a Bridging Correspondence Course for the AOCP and LAOCP Examinations.

Throughout the Course, your papers are checked and commented upon to lead you to a successful conclusion.

For further details write to:

The Course Supervisor
WIA
PO Box 1066
Parramatta NSW 2124
(109 Wigram Street, Parramatta)
Phone: (02) 689 2417

11am to 2pm Monday to Friday
7 to 9pm Wednesday

Back issues of AR available to WIA members

Jan 1969 to Dec 1987
$2.50 each

Jan 1988 to current issue
$4.00 each

(Some issues out of stock)

Prices include postage

AR BACK ISSUES
PO Box 300 Caulfield South
Vic 3162

MICROWATT RF POWER METER

RON COOK VK3AFW 7 DALLAS AVE OAKLEIGH 3166

Low-level RF measurements are difficult for most radio amateurs to make. This article describes a simple meter capable of measuring RF power from one Watt down to less than 10 µW with good accuracy (from audio frequencies to beyond 150 MHz).

Introduction

The measurement of power at levels of around one Watt and higher is readily done using commercial equipment or by constructing the circuit shown in Figure 1. This is a terminating power meter, that is it terminates a line and absorbs the incident power. Another family of power meters is known as a through-line meter and absorbs very little of the power being measured. My application was the measurement of power from an exciter to be used for VHF transverters and measurement of the output from the oscillator and low-level stages of those transverters, thus a terminating meter was suitable but, because of the lower power levels involved, a more sophisticated circuit was required. This article describes the design and development of the meter.

The Circuit

The basic limitation of the circuit in Figure 1 is due to the finite turn-on voltage of the diode D. For germanium diodes this is about 0.25 V, 0.4 V for hot carrier diodes and 0.6 V for silicon diodes. Figure 2 shows a curve for a typical diode. If we have a two-Watt transmitter connected to the circuit in Figure 1, a voltage of 10 V rms will be applied across the 50Ohm resistor. If the meter M draws 1 mA at full scale, a value of Rm can be found to limit the current to this value for 10 Watts input. The voltage across C will be 1.414 times the rms voltage, so Rm will be 14.14/1 = 14.14 k Ohm. We need to allow for the meter resistance which will be about 100 Ohms. Also, examination of Figure 2 shows that there will be a small volt drop across D, about 0.25 V at 1 mA, so this needs to be allowed for. A resistance of 13.8k Ohm would be suitable for Rm.

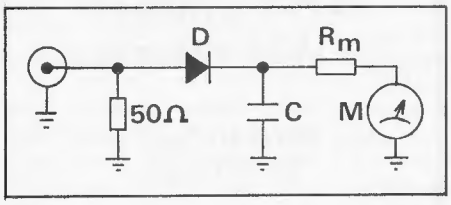

Figure 1

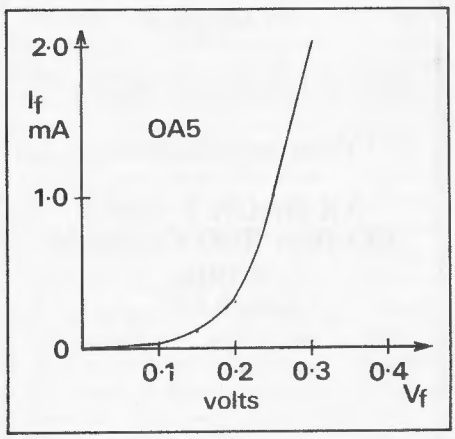

Figure 2

Now if the power level were reduced to one milliWatt, the peak RF voltage is 0.316 V. After allowing for the diode drop we have 66 mV to drive the 1 mA through the meter. Unfortunately this will not happen, as the meter has a 100 mV drop across it at one mA. Indeed, long before the power levels have been reduced to that level, we will have had problems of non-linearity with our simple instrument. Selecting a more sensitive meter will alleviate the problem to a degree,but it is difficult to buy a meter requiring less than 50 µA, and even with this improvement, eventually the diode volt drop will defeat us.

If we could make the meter load very large, say 1M Ohm, then the power level could be reduced a very long way before the diode volt drop caught up with us. An obvious solution is to use an op amp as a meter amplifier. Figure 3 shows the circuit I selected. The diode load is 1M Ohm, which is roughly equivalent to having a meter of sensitivity 0.1 µA, the difference being that there is no requirement for the diode to supply 100 mV to drive the meter, the op amp looks after that.The rectified voltage is filtered by a 1000 pF capacitor and applied to the high-resistance input of the op amp. The amplifier supplies enough current to produce an equal voltage across the range resistor, which is selected to suit the meter. The meter resistance is not important; I chose a 1mA movement because it was readily available.

Scales and Ranges

The instrument is really an rf voltmeter with a 50 ohm input resistance. Indeed,in some applications it may be preferable to calibrate it in volts. The power reading is obtained by squaring the meter reading an multiplying by the full-scale value. For example, the indication of power at half deflection is actually 0.5x0.5 = 0.25 full scale. Thus, on the 10mW range, the meter indication of 0.5 represents 2.5 mW, and an indication of 0.1 represents 0.1 mW or 100 µW.

While I chose to use a 1, 5, 10 sequence for the ratio between ranges, a 1, 10, 100 sequence would be suitable for powered meter applications. With such an arrangement, the meter need not be used below about one-third scale except on the most sensitive range where powers as low as 2.5µW can be measured at five per cent deflection. This is sufficiently sensitive to get a reading from local TV and broadcast stations using the station antenna.

It may be convenient to make up a chart to allow quick conversion of a meter reading to power level. The chart could be stuck onto the top of the meter case so it can be readily found when required!

Limitations

Because it is a simple circuit it has some limitations. Firstly the op amp must be carefully chosen to have very low bias current and low offset voltage. The offset voltage must be negligible compared to the rectified voltage at the lowest power levels, and the bias current must be negligible compared to the current in the 1M ohm resistor at the lowest power levels.I found that an LM308AN was suitable. The 741 series and the lower performance versions of 308 series were inadequate.

Of course the basic limitations of the diode rectifier still exist,but for the accuracy class involved I found the limitation negligible in this instrument. Initially I tried to use a germanium diode because of its low forward drop, but the reverse resistance was about 1M ohm and so the rectification efficiency was very poor. A hot carrier diode was substituted with excellent results.

The parasitic impedances in the 50ohm load also cause errors as the frequency is increased. Tests carried out using equipment at the QTH of Harold, VK3AFQ, indicated satisfactory performance up to about 200 MHz. A better quality load would extend the range. As it is it can be used for initial tune-up of low-power

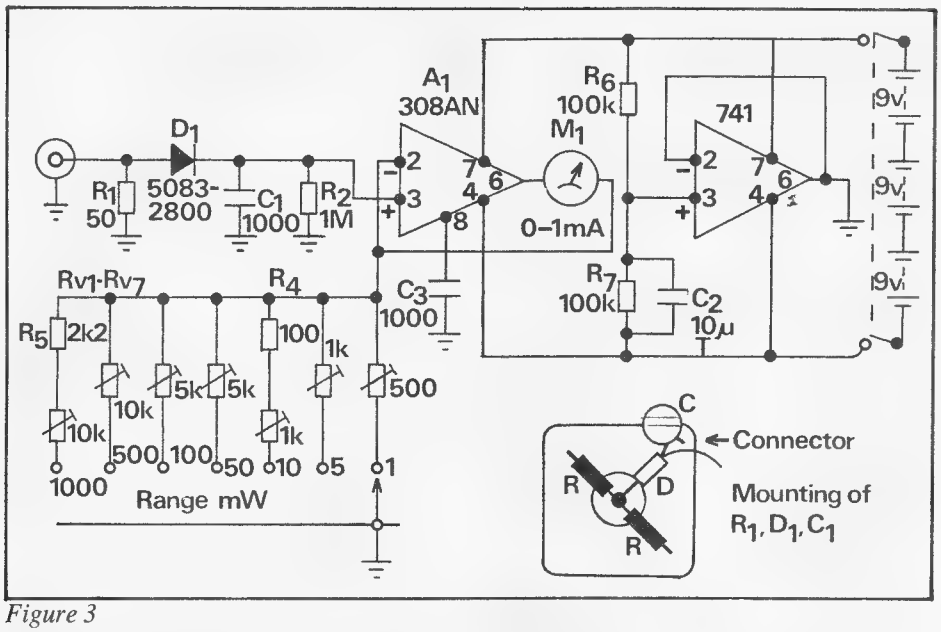

Figure 3

equipment at 450 MHz but the VSWR is probably greater than 2:1 and final tune-up needs to be done into the actual load.

Power Supply

Because the op amp requires a balanced positive and negative supply, it is tempting to use two 9V batteries in series with the common point earthed. Unfortunately for a one-Watt range, the op amp needs a +/-12V supply or more to ensure "headroom" for the amp above the 10 volts from the rectifier. Four 9V batteries could be used, but this is pushing the op amp a bit hard, so three 9V batteries were selected to keep the instrument small and portable. A 741 op amp is used to synthesise an earth point for the system.

Calibration

To calibrate the instrument, a DC source and DC voltmeter are required. Select a range and apply a voltage equal to the peak RF voltage for full scale on the range. For example, this is 0.3162V for 1mW, 1.000V for 10mW, 3.162V for 100mW and 10.00V for 1 watt. Make sure you apply the correct polarity, otherwise you will not get a reading. If you wish to check the linearity of the meter you can do so by measuring the voltage to obtain indications at the main scale markings. Remember, most moving pointer meters are only intended to be accurate to about three per cent above 1/3 full scale, and the cheaper ones will be worse than this. Also, such meters can suffer from stiction, and a gentle tap on the meter face before reading is good practice.

Calibration Table

	RF Power Level						
Meter Reading	**Range**						
	1W	**500mW**	**100mW**	**50mW**	**10mW**	**5mW**	**1mW**
0.0	0	0	0	0	0	0	0
0.1	0.010	5.0	1.0	0.50	100 µW	50 µW	10 µW
0.2	0.040	20.0	4.0	2.0	400 µW	200 µW	40 µW
0.3	0.090	45.0	9.0	4.5	900 µW	450 µW	90 µW
0.4	0.160	80.0	16.0	8.0	1.60 mW	800 µW	160 µW
0.5	0.250	125	25.0	12.5	2.50	1.25 mW	250 µW
0.6	0.360	180	36.0	18.0	3.60	1.80	360 µW
0.7	0.490	245	49.0	24.5	4.90	2.45	490 µW
0.8	0.640	320	64.0	32.0	6.40	3.20	640 µW
0.9	0.810	405	81.0	40.5	8.10	4.05	810 µW
1.0	1.000	500	100.0	50.0	10.0	5.00	1.00 mW

The above table shows the power level for various meter indications on seven ranges. The square law response is clearly evident. The 500mW, 500mW and 5mW ranges could be omitted as there is sufficient overlap on decade ranges alone.

Concluding Remarks

Whilst other meters using thermistors, filament lamps and diode compensation circuits have been used successfully for µW power measurement, the best going into the 40 GHz region, they are more complex and require special machined parts for the microwave region. For my application the complexity did not seem warranted.

The meter has proved very useful to me and I hope that those of you who make this instrument enjoy similar success.

References

1 Grebenkemper, J, KA3BLO, The Tandem Match — An Accurate Directional Wattmeter, QST, Jan 1987, pp 18-26.
2 Braithwaite, I, G4COL, Simplified RF Power Meter, Technical Topics, Radio Communication, May 1986, p342.
3 Gibson, H L, Test Equipment for the Radio Amateur, Second Ed, Chapter 4, RSGB.
4 Braithwaite, I, G4COL, An RF Voltmeter, Ham Radio, November 1987, pp 65-75.
5 Pivnichy, J, N2DCH, A Sensitive RF Voltmeter, Ham Radio, July 1989, pp 62-67.

ar

NOVEL POLARITY TESTER

TREVOR SHERRARD VK4ATS
38 HALSMERE ST
GEEBUNG 4034

Equipment Required
(i) DC source
(ii) Test probes (copper)
(iii) Slice of potato (raw)

Method
(i) Connect leads to source
(ii) Insert into potato (about 2mm spacing)

Result: One probe shows green. This is the positive pole.

So the humble spud joins the ranks of Hewlett Packard, Tektronix, Fluke etc.

"Don't leave home without one".

GETTING MORE FROM YOUR OSCILLOSCOPE

IVAN HÜSER VK5QV 7 BOND ST MOUNT GAMBIER 5290

Next to the multimeter, the cathode-ray-oscilloscope is, arguably, the most useful piece of electronic test equipment available to the radio amateur. As well as allowing the wave-shape of a voltage to be displayed, the modern calibrated oscilloscope allows the user to determine such things as the peak-to-peak value of a waveform, the period of the waveform from which the frequency can be determined, phase shift and whether the waveform is AC, DC or a complex waveform of AC superimposed on DC.

A cathode-ray-oscilloscope is also necessary when checking the linearity of RF power amplifiers.

The most common oscilloscope used by amateurs is perhaps the dual-trace oscilloscope with a frequency response of DC to 20MHz[1]. These are available at reasonable cost through the normal commercial channels and represent good value for money.

The aim of this article is to discuss some relative points that may help you effectively set up your cathode-ray-oscilloscope, recognise some of the problems encountered and generally improve the usefulness of the instrument.

Initial Setup

There are four important adjustments necessary when initially setting up a cathode-ray-oscilloscope and these adjustments will need to be checked from time to time during operation. They are **focus, astigmatism, trace rotation and probe compensation**, and are generally completed in that order.

All of these adjustments have some bearing on the resolution and accuracy of the traces and so should be effected with care. Some of the controls need only infrequent adjustment and hence these controls may be located inside the oscilloscope. Consult your manual before attempting any adjustment.

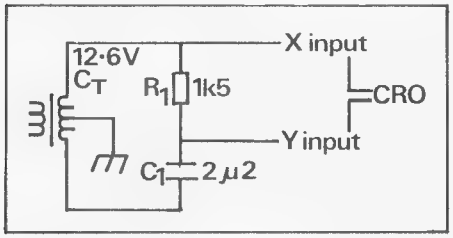

Figure 1

Focus — Astigmatism

These two adjustments should be done concurrently and are best accomplished using a circular trace. Figure 1 shows a 90° phase-shift network which, when connected to the oscilloscope operating in the X-Y mode, will give an approximate circle on the screen. A variable resistor may be used in place of R_1 to "tweak" the circle if so desired.

Adjust the X and Y gain controls and the vertical and horizontal shift controls until the circle takes up about 60 to 80 per cent of the screen. Adjust the focus using the sides of the circle and the astigmatism using the top and bottom of the circle, repeating the adjustments until the sharpest overall pattern is achieved. These adjustments should be carried out with the intensity set to "normal" brilliance, bearing in mind that a sharper trace will be obtained if a low intensity is used.

Alternatively, the focus can be adjusted on the slope of a sine-wave and the astigmatism on the flat top of a square-wave. This is, in fact, how I complete the adjustments, using waveforms obtained from an audio signal generator. If a signal generator is not available, the sine-wave can be obtained from the secondary of a low-voltage transformer and the square-wave from the calibration output of the oscilloscope.

Trace Rotation

It is impossible to manufacture a cathode-ray-tube having perfect geometry. This, together with external influences such as stray magnetic fields, including the earth's magnetic field and fields produced by surrounding wiring, can cause the trace to tilt. In modern oscilloscopes, a trace rotation control is provided to counter the problem.

With the input to the Y amplifier grounded, obtain a sharp horizontal line on the screen and adjust the trace rotation control until the trace is aligned with the horizontal graticule lines.

Probe Compensation

One of the most important, yet often the most overlooked considerations when using an oscilloscope, is how to connect the oscilloscope to the circuit under test.

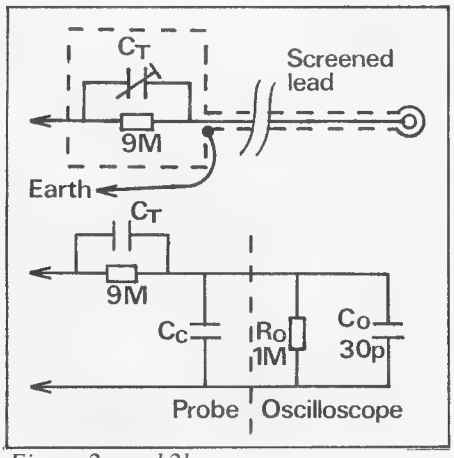

Figure 2a and 2b

Experience has shown that it is best to use a commercial probe with your oscilloscope rather than a home-brewed lead using a random length of RG58 coax or whatever.

The input impedance of a cathode-ray-oscilloscope is typically 1MΩ shunted by about 30pF of stray capacitance. Another 60pF or so can be added for the capacity of the lead. When connected to a circuit, this combination can cause distortion of the waveshape and errors of measurement. In some cases it can cause the circuit to malfunction.

On DC and low-frequency AC, the input impedance can be considered to be 1MΩ resistive and may have negligible loading effect on the circuit, although even 1MΩ can cause problems in some circuits, as will be seen later.

As the signal frequency increases, the reactance of the effective shunt capacitance decreases and, at 10MHz, 100pF presents a reactance of only 160Ω — far less than the 1MΩ impedance quoted in the specifications.

With a X10 probe, the DC-input impedance will be raised to 10MΩ and, at the same time, the shunt capacitance will be effectively reduced to around 10pF. This represents a useful improvement in input impedance.

The circuit of a typical X10 probe is shown in Figure 2(a), while Figure 2(b) shows the equivalent circuit. The trimmer capacitance (C_T) together with the cable capacitance (C_C) in parallel with the input capacitance to the oscilloscope (C_O) form part of an AC voltage divider.

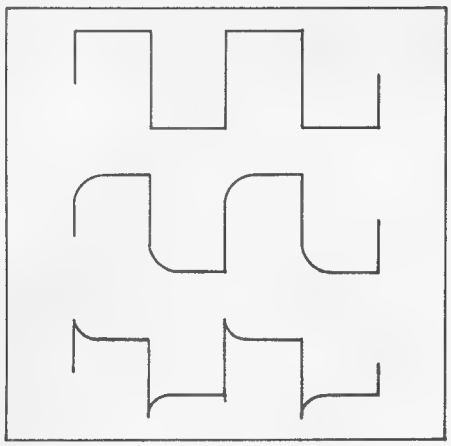

Figure 3a, 3b and 3c

When correctly adjusted, the reactance ratio will be the same as that of the resistive divider, and the circuit becomes frequency independent.

With the probe set to X10, C_T should be adjusted to give the "best" waveshape using the square-wave calibration output of the oscilloscope or a square-wave from a signal generator. Figure 3(a) shows a square-wave viewed on an oscilloscope using a correctly compensated probe, while figure 3(b) shows the effect of an under-compensated probe and Figure 3(c) an over-compensated probe.

Probe Applications

Perhaps the best way to illustrate the use of a probe is by way of practical examples.

The effect of stray capacitance can be demonstrated by viewing a square-wave, first with a correctly compensated probe set to X1, and then with the probe set to X10. On X1 a distinct integration of the waveshape should be seen as shown in Figure 4(a). This is caused by the stray capacitance being charged and discharged via the internal resistance of the square-wave source and is typical of a charge/discharge time constant curve for a resistor and capacitor in series. On X10 the effective stray capacitance will be less, hence the effect on the waveform will also be less. This is shown in Figure 4(b).

It can be seen that waveforms having fast rise and fall times such as a square-

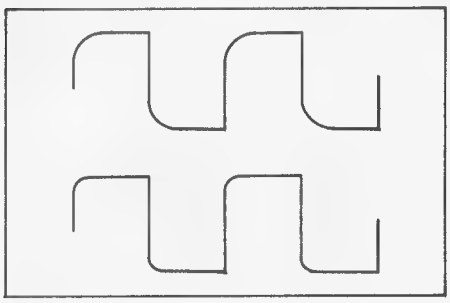

Figure 4a and 4b

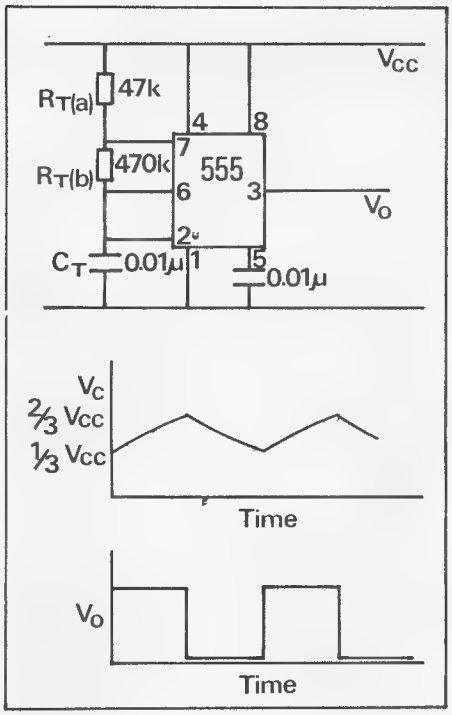

Figure 5a and 5b

wave, may be distorted by the capacitance of the lead and that the longer the lead the greater will be the capacitance and, hence the greater the distortion of the waveform.

Perhaps one of the most subtle effects of lead capacitance is that it can produce a phase-shift, which in turn may cause an otherwise stable circuit to oscillate. Using a X10 probe will generally correct the problem.

A X10 probe may also be used to reduce the DC loading on a circuit. Consider the 555 astable multi-vibrator circuit shown in Figure 5(a).

A change in state of the output occurs when the timing capacitor (C_T) charges to 2/3 of the supply voltage and again when it discharges to 1/3 of the supply voltage, producing the waveforms shown in Figure 5(b).

With the X1 probe connected across the capacitor, the 1MΩ internal resistance of the oscilloscope, together with

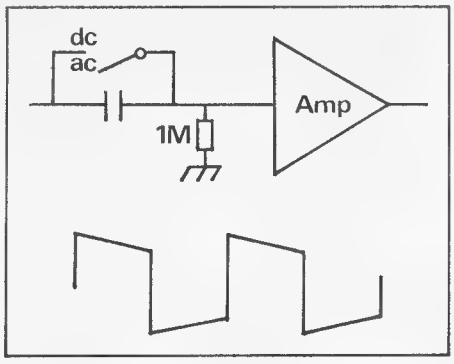

Figure 6

the two charging resistors R_T(a) and R_T(b), form a voltage divider. A simple calculation will show that with the oscilloscope connected, the maximum voltage to which the capacitor can charge will be less than 2/3 of the supply voltage and the circuit will cease to operate.

If a X10 probe is used, the 10MΩ impedance will have little effect on the operation of the circuit.

Standing Waves

As the frequency increases, the length of the probe lead may become an appreciable fraction[2] of a wavelength, particularly if a long home-brewed lead is used. Since the cable is not terminated in its characteristic impedance, standing waves can occur.

When monitoring the RF output from a transmitter, the standing waves can result in a high voltage point at the input of the oscilloscope. This has a nasty habit of destroying the front end of oscilloscopes.

The AC-DC Switch

Distortion of a waveform can sometimes be attributed to the incorrect use of the AC-DC switch. Figure 6(a) shows the basic connection of the switch.

If a square-wave is viewed on an oscilloscope with the AC-DC switch in the AC position, partial differentiation of the wave-form can occur due to the input coupling capacitor and the 1MΩ input resistance of the oscilloscope. This effect is shown in Figure 6(b).

Summary

When using an oscilloscope:

1. A compensated probe should be used with the switch in the X10 position for most applications. The X1 position should only be used when viewing very low-voltage waveforms (in a low-impedance circuit).
2. Always start with the AC-DC switch in the DC position and, if possible, leave it in that position while viewing waveforms.
3. Rather than extend the length of an oscilloscope lead, move the oscilloscope closer to the circuit under test.
4. Read your manual.

Notes

1. Note that a 20MHz oscilloscope can be used to display a 30MHz waveform, but the calibration of the vertical amplifier will no longer be valid.
2. On 30MHz, a 1/4 wavelength of RG58 coax measures less than two metres.

Continued on page 15

A SIMPLE DIP METER

DREW DIAMOND, VK3XU
'NAR MEIAN' GATTERS RD
WONGA PARK 3115

The dip meter is a very handy instrument for the radio worker. Resonant frequency of tuned circuits may be found simply by loosely coupling the dipper coil to the inductive component of the circuit under test and searching for a dip on the meter. The inductance of an unknown coil, or the capacitance of an unknown capacitor may be found by measuring the resonant frequency of a known/unknown combination and then looking up a chart (see Ref 1). The meter may also be used to check the quality of SSB, CW, RTTY or AM transmissions, and as a signal source for receiver work. Wavemeter operation is also provided, so transmitter stages may be checked for harmonics and/or spurii. This project should interest anyone with more than a passing interest in the technical aspects of radio, and offers an instrument which will find frequent application, both inside and outside the shack.

Theory of Operation

The classic Hartley configuration was found by experiment to be the simplest circuit to provide the widest frequency coverage consistent with a satisfactorily constant output indication over each range. The 1.8MHz to 30MHz frequency range is covered with five home-made plug-in coils: L1-L5. The coils are mounted upon four of five-pin plugs so that a variable capacitance maximum of 300pF may be selected to cover the 1.8 to 17MHz ranges, and 100pF maximum for the 17 to 30MHz range.

Oscillation is maintained by Q1, an MPF102 FET. The sine voltage appearing at the source tap is detected by germanium diode D1 and C9 charges to an EMF of about 0.5V which drives meter M1. Earphones may be plugged into the circuit here so that any audio modulation upon the signal can be heard.

The 'dipping' phenomenon is produced when the coil of the dipper is coupled to the coil of the tuned circuit under test. This is what I think actually happens:"When the field from the primary coil energises the 'passive' coil, it will, if the exciting frequency is at or near the resonant frequency of the passive circuit, set up its own field in opposition to the primary field, which tends to lower the amplitude of oscillation in the primary circuit." If the coupling is sufficiently 'tight', oscillation may actually cease.The higher the Q of the passive circuit, the sharper and deeper the dip for the same degree of coupling. This explanation is at odds with that normally given in the standard texts, which generally state that energy is "absorbed" or "sucked" from the dipper coil, but this does not explain why a higher Q circuit produces a deeper dip than a low Q one.

(This is because the coupling factor, or tightness of coupling, is defined as the product of coupling coefficient K and Q. When KQ = 1 coupling is said to be critical. Ed)

Wavemeter operation is obtained when the oscillator is switched off. The circuit then becomes a simple tuned circuit and diode detector tapped into the coil.

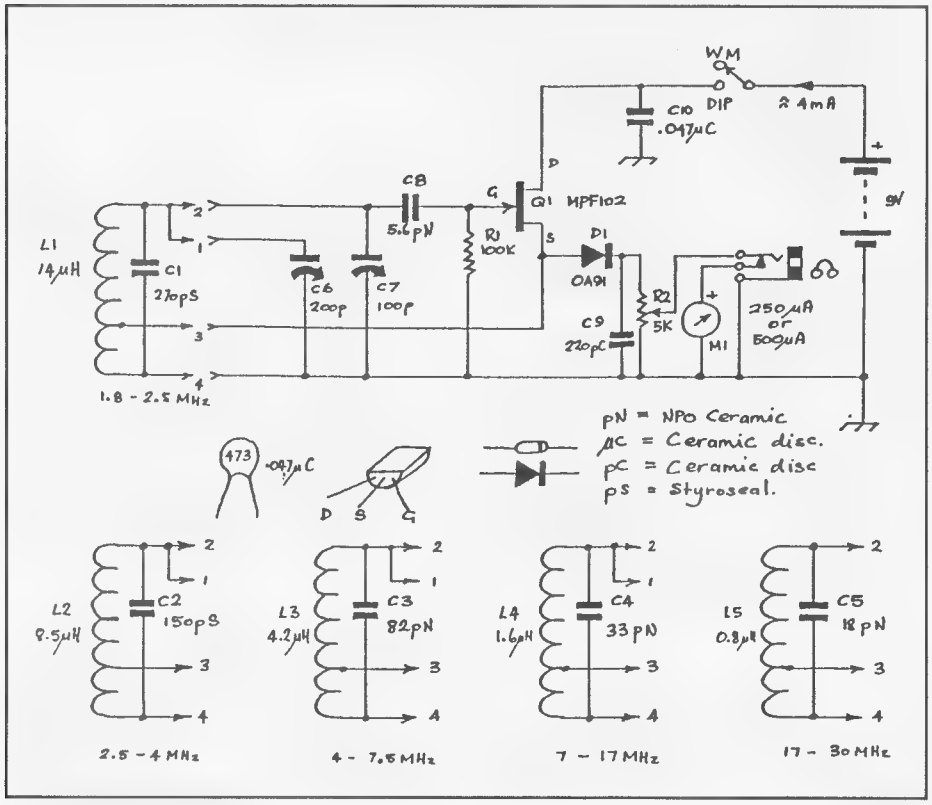

Figure 1. DIP OSCILLATOR 1.8-30MHz

Construction

The dipper shown in the photo was built in an off-the-shelf aluminium box measuring 7.5 x 13.3 x 5.4cm. The circuit components have been mounted upon a small tag strip adjacent to the coil socket, so ensuring that signal conductors are kept short. The 200pF + 100pF variable capacitor at C6 and C7 is known to be available from two sources at present (more about parts later). These capacitors usually come with little padder capacitors fitted to the solder tags. These are not required, so remove the 8BA screws and break off the copper plates. Use a multimeter on its highest ohms range to check that the capacitor plates are not shorting or leaky (must read infinite over the entire rotation). When fitting the capacitor, make sure that the mounting screws do not touch the plates. Use spacers if this is a problem.

The photo shows a suggested dial arrangement. The scale, compassed upon thin cardboard, may be fixed onto the case with double-sided adhesive tape, capacitor shaft projecting through the centre.The cursor was made from a 72mm length of 1.5mm perspex, width to suit a largish knob of about 3cm diameter. A line should be scored down the middle of the perspex as shown, then glued to the knob. A very small hole (say 1mm) will be required in the cursor corresponding to each dial scale to facilitate

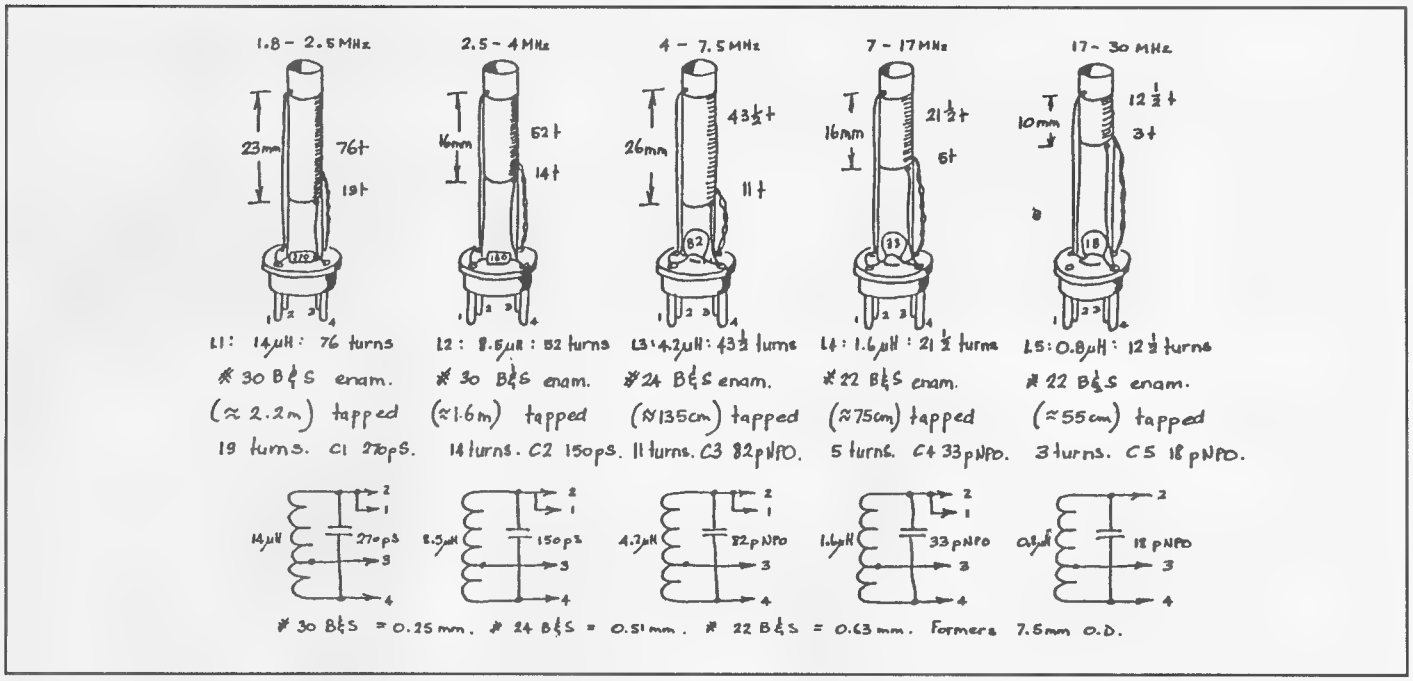

Figure 2. PLUG-IN COIL DETAILS

calibration later.

A deliberate choice was made to use small diameter coil formers so that compact circuitry may be explored with the dipper. The five coil formers should be glued with epoxy cement to the five-pin plugs preparatory to winding the coils. The 7.5mm formers shown have had their bases cut off with a junior hacksaw, leaving just the tubular parts, about 50mm long. Take care cutting the bakelite formers — they are rather brittle. Drill across the full diameter of the formers with a 1mm drill at the places indicated. These holes will provide anchor points for the coil ends.

To wind the coils L1 and L2: place one end of the wire in a vice. Thread the other end of the wire through the bottom anchor holes and solder it into the appropriate plug pin. Now, whilst keeping the wire taut, walk towards the vice making sure all the time that each turn lies right next to the last. At the 1/4-way mark, pull out about 5cm of wire, then twist it into a little pigtailed loop. This will form the source tap. Now carefully wind on the remaining turns. Do not let go your grip on the coil until the other end is passed through the top anchor holes, or the whole thing will uncoil. Coils L3-5 may be wound in the usual way, holding the winding onto the former between forefinger and thumb.

The coils should be checked and proven to give the correct frequency range.It may be necessary to change the value of capacitor across a coil to obtain the correct range.For example, if it is found that the nominally 4 to 7.5MHz range is a little low, then C3 could be decreased to the next lowest preferred value, ie 68pF. When all is right with the coils, it is strongly recommended that an additional fillet of epoxy be applied to the base of the coil for extra strength and to provide support for the capacitors. Later they should be coated with clear lacquer to cement and protect the winding. The coils may be colour-coded to the dial scale, or keyed alphabetically (or both) to give unambiguous ranging.

Calibration

The small 1mm holes in the cursor will allow a pin to be used to mark the calibration points, then the knob swung to one side and the actual frequency marked upon the appropriate scale. Mark lightly with pencil first, and so obtain a 'feel' for the frequency spread, then complete later with a fine black pen.

There are a number of methods available for calibrating the dipper. The simplest and most direct way would be to loosely couple a frequency counter to the coil and read the frequencies off for each range. A one or two turnloop at the counter input should provide sufficient signal for this. If the dipper must be tightly coupled to obtain unambiguous readings, then errors will occur, so another method should be adopted.

or

Listen for the dipper signal on a calibrated general coverage receiver. Set the receiver to salient frequencies and tune

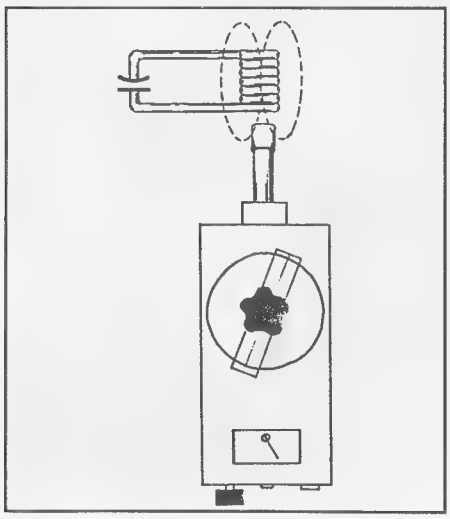

Figure 3. Inductive coupling - end on.

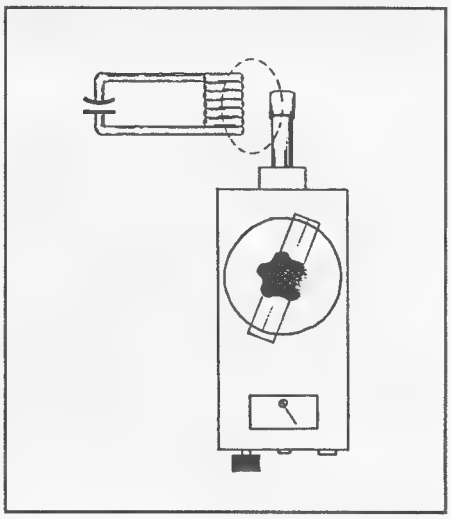

Figure 4. Inductive coupling - side on.

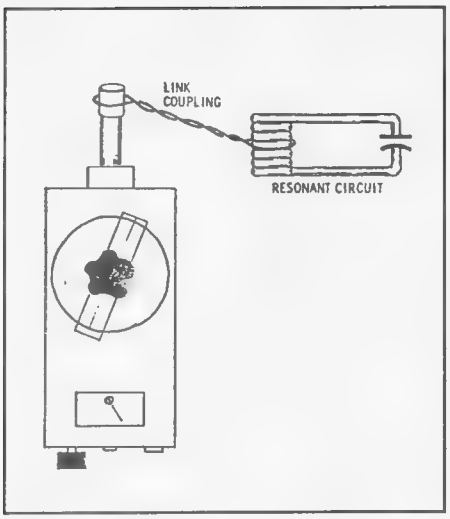

Figure 5. Link Coupling .

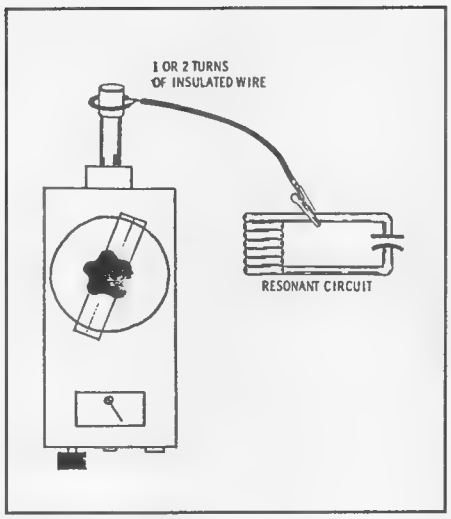

Figure 6. Capacitive coupling

the dipper for a signal at each desired calibration point. Remember, as with any superhet, a strong signal may result in the reception of the 'image', so be on guard for this potential source of serious error. The stronger signal is probably the correct one.

or

If a calibrated signal generator is available, connect a three or four-turn loop to the output connector of the generator, which is adjusted to supply an appropriate frequency and a large signal. With the dipper loosely coupled to the loop, a flick in meter reading should be observed as the dipper dial is swept over the generator frequency (or listen for a beat in headphones if this is easier for you).

Uses

References 1, 2 and 3 show typical applications for this instrument. Shown in Figures 3-6 are some of the most commonly used measurement techniques available. Always use the least amount of coupling necessary to obtain a visible dip.

Parts

All the components specified in this project are readily obtainable at present. The variable capacitor may be purchased from Jaycar or Truscotts Electronic World (Croydon, Vic). Make sure the one you get is exactly as specified, complete with 1/4" shaft of adequate length. The meter, case, five or four-pin plugs (known as line or speaker plugs) and 7.5mm bakelite coil formers were obtained from Electronic World. Plugs, socket, signal meter and some other parts also available from Dick Smiths.

Problems

If your meter will not oscillate on some ranges,you may have a low gain MPF102, so try a new one (perhaps a different brand). Avoid using ordinary disc ceramics for C3-C5, as they are rather lossy, and may cause erratic operation.

Erratic operation or false dips may also be caused by a fault in the variable capacitor. Check that the plates are not shorting, and look through the vanes to see that no foreign matter is caught there. Carefully use compressed air to remove any particles. Check also that the rotor wiper is clean and providing good contact.

If the oscillator is switched on without a coil plugged in, a meter reading will be observed. This is simply drain-source current now flowing through the diode, as the low-resistance path through the source tap is removed. If this annoys you, reverse the direction of diode and meter. I left mine as is, because it provides a rough but quick battery check.

When monitoring signals, the meter should not have to be directly coupled to the transmitter, as enough signal will normally be found 'in the shack' to pro-

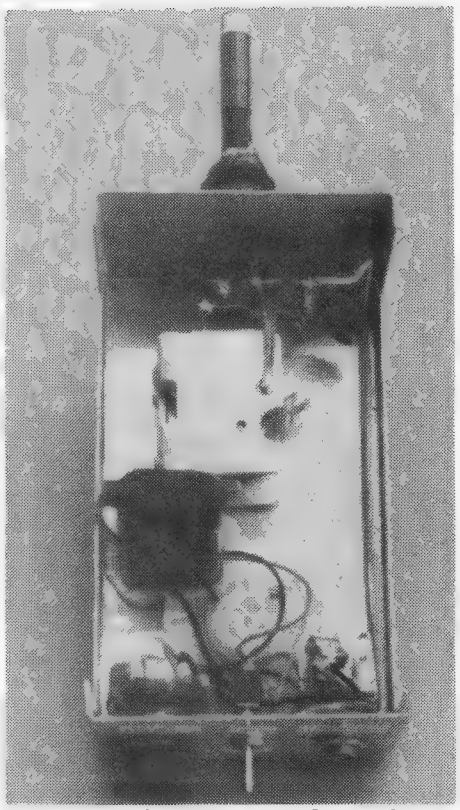

Placement of Components - Internal View

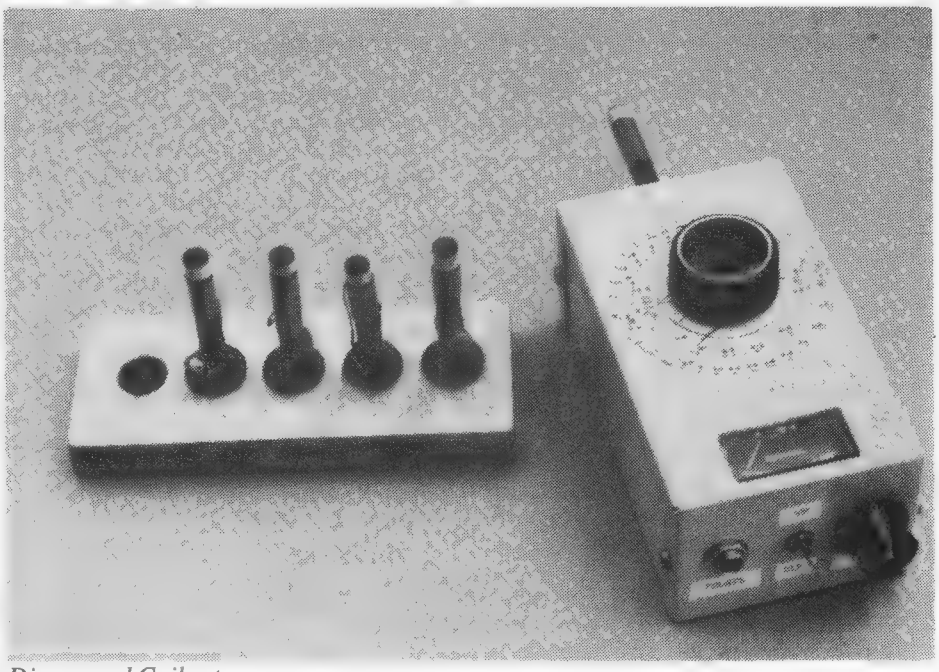

Dipper and Coil set

vide headphone operation.

Obviously, with the dial knob directly connected to the variable capacitor shaft, frequency adjustment is very coarse. A worthwhile improvement would be the addition of a 6:1 planetary drive.

If, after fruitless attempts on your part, you cannot get your dipper to work satisfactorily, please write and I shall extend any reasonable amount of help necessary (SASE please).

References and Further Reading

1. Measuring Coils and Capacitors with a Dip Meter — Novice Notes, May '88
2. Any Amateur Radio Handbook
3. Servicing with Dip Meters — Lenk, Foulsham-Sams
4. Bailey, G3WPO — FET Dip Oscillator MKII, Rad Com Apr 87.

Parts List

Capacitors	Where used
5.6pF NPO ceramic	C8
18pF (nominal) NPO ceramic	C5
33pF (nominal) NPO ceramic	C4
82pF (nominal) NPO ceramic	C3
100 + 200pF dual gang variable	C6, C7
150pF (nominal) styroseal	C2
220pF ceramic	C9
270pF (nominal) styroseal	C1
0.047uF ceramic	C10
Resistors	
5Kohm linear pot	R2
100Kohm 1/4W, 5%	R1
Semiconductors	
MPF102 FET	Q1
OA91 etc germanium diode	D1

Miscellaneous

Case, 7.5mm coil formers (5), four or five-pin plugs (5), socket to suit, 250uA or 500uA meter, headphones connector, 9V/216 battery and connector, SPDT switch, pot knob, dial knob, 1.5mm perspex material, winding wire, hook-up wire, small tag strip, 4BA CSK screws for variable capacitor (3), screws, nuts, solder, epoxy cement, wet weekend (1) etc.

Errata and Addenda for DC Superhet – *Drew Diamond VK3XU AR May 90*

- C42 is shown as 10µT. It should be 220µE (as shown correctly in the parts list).
- Parts list should indicate 0.047µF (or 0.1) disc ceramic (not 0.47).

Also, a trace of 50Hz FM on the VFO (not previously noticed) has been traced to stray flux from the power transformer. The VFO circuit board should therefore be placed so that L6 is as far from the power transformer as practicable (ie rotate the VFO board 180° from that shown in the photo).

Getting more from your Oscilloscope Continued from Page 8

Profile of the Author

Ivan was born and educated in Adelaide. He served an apprenticeship as an electrical fitter and, at the same time, completed a radio course at the School of Mines (now the SA Institute of Technology) and obtained his AOCP in 1952.

After returning from a two-year working holiday in the UK and Europe, he obtained his BOCP and found employment as a radio mechanic until joining TAFE as a lecturer in 1969.

Ivan has held the callsigns of VK5QV, G3KGH and VK2ATX.

Looking forward to early retirement later this year, Ivan spends much of his spare time caretaking at Centenary Tower on top of Mount Gambier, where he wrote this article during breaks between attending to tourists. **ar**

Ivan Huser VK5QV

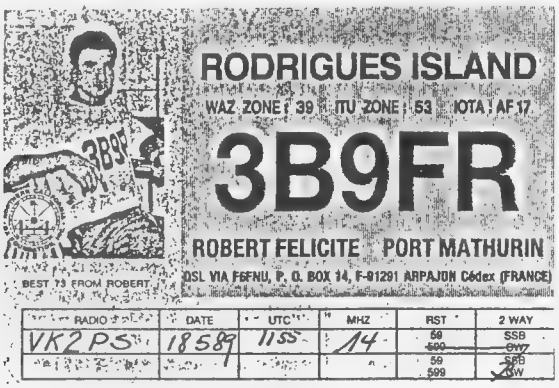

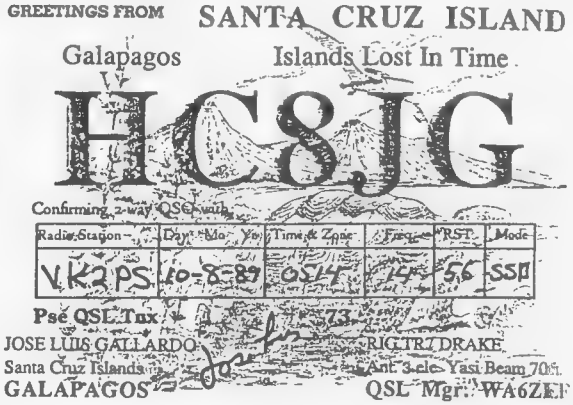

More exotic DX QSL cards from stations worked by Stephen Pall VK2PS

A SIMPLE AND INEXPENSIVE RESISTANCE-CAPACITANCE BRIDGE

J GAZARD VK5JG 2 CORBIN ROAD MENINDIE GARDENS 5081

The circuit of the bridge is shown in Figure 1. An audio oscillator (Tr 1 Tr 2) generates a tone to activate the bridge and the unknown resistor or capacitor is compared with a standard. The ratio of the unknown to the standard is shown when the potentiometer finds the null point of the tone.The tone is amplified by Tr 3.

Because leakage from the oscillator to the amplifier can reduce the depth of the null, the oscillator and the amplifier are fed by separate batteries and placed as far apart as possible.

The bridge can be assembled under a piece of masonite or other hardboard about 250mm square, which forms the top of a shallow box 50mm deep. See Figure 2. To improve the appearance, the hardboard can be stained with "Raven Oil" black which does not affect its insulation properties. The oscillator and amplifier can be built on separate matrix boards about 50 by 35mm and mounted under the top board.

The potentiometer should be wire-wound with a resistance of 2500 or 5000 Ohms and should be as large in diameter as possible. The three transistors are general purpose types such as BC108, BC548. The current from the batteries is 4mA for the oscillator and 2mA for the amplifier so that the 9V No 216 batteries should last for years.

For standards, one per cent resistors are obtainable, but five per cent types should be satisfactory for amateur use. Greencaps are suitable as standard capacitors. The minimum range of standards is 100Ω, 10000Ω and 1 Meg Ohms for resistors and 100pF, 0.01 and 1 μF for capacitors, but if a 10-position switch is available, the range could be 100Ω, 1000Ω, 10000Ω, 100000Ω and 1 Meg Ohms and 100pF, 0.001. 0.01, 0.1, and 1 μF. To connect the unknowns it is convenient to use miniature battery clips connected to the terminals by 50mm of flexible wire.

Calibration is done with a protractor. First the angle of the swing of the potentiometer is measured. This is the angle A in Figure 3. The scale will read the ratio of the unknown to the standard, that is BC/DC. If this ratio is R, then CD = BC/R, BC + CD = A, and from these equations it can be shown that BC = A{R/(R+1)}. For example, if A is 290 degrees, for ratio 0.4, BC = 290(0.4/1.4) = 83 degrees. Also for ratio 6, BC = 290(6/7) = 248 degrees.

The angle BC can be plotted on a sheet of paper for all the ratios required, and the paper can be pasted to the top board. See Figure 2. Since the impedance of a capacitor decreases with increase in capacitance, the scale for capacity will be the reciprocal of that for resistance so that two scales will be necessary, one for R and one for C. Otherwise a switch could be used to reverse the positions of the standards and the unknown when changing from R to C.

High-resistance headphones or similar 600-Ohm types are suitable. Note that in this circuit the headphones are in the collector circuit of TR3 and should be capable of passing the collector current without ill effect. **ar**

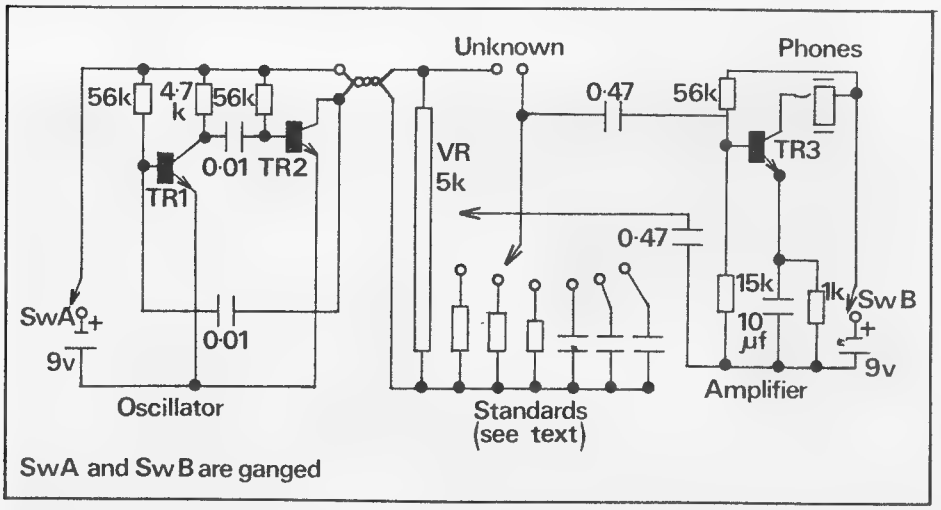

Figure 1

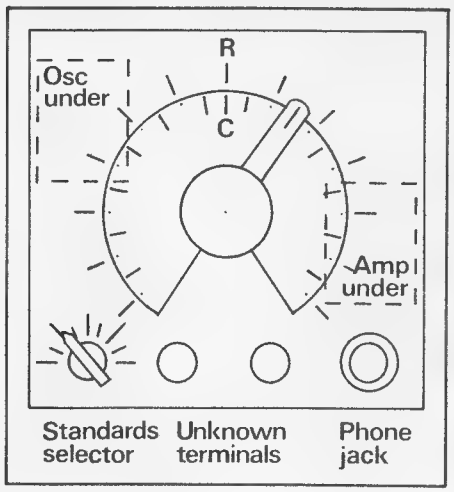

Figure 2

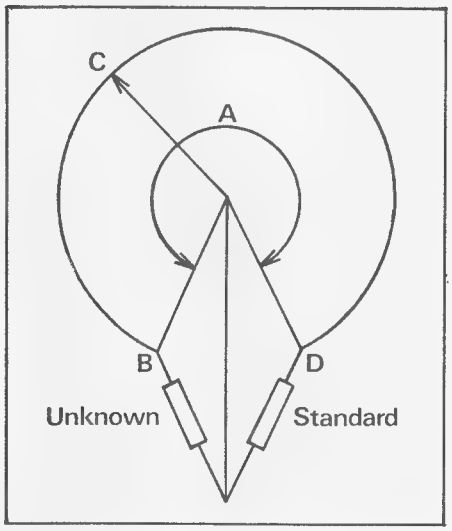

Figure 3

Support the advertisers who support Amateur Radio Magazine.

LEVEL AND FREQUENCY ON ONE METER

KEN KIMBERLEY VK2PY 21 NICOLL ST ROSELANDS 2196

Editor's note: This is part of a much larger article on the development of a square-wave signal generator by the author. Publication of the full article has been delayed by lack of space among other things, but we thought the following brief extract might be of interest to those who like to build their own test equipment.

The purpose of the level meter is simply to permit setting the output of the generator to a known level. It was intended to show full-scale at the maximum output of the generator plus gain-controlled amplifier which was about five volts peak (10V peak to peak).This was found to produce about 3V DC across C_2 and varied little over the frequency range up to about 4MHz.

Germanium diodes are used in preference to silicon because they have a much lower "turn-on" voltage (approx 200 vs 600 mV) so give better meter linearity over the lower part of the scale.

Frequency control of the oscillator is by a variable potentiometer (100k) and this introduces mechanical problems in coupling to a suitable dial (a rare item itself). The thought occurred that it might be possible to use the level meter as a frequency readout, thus avoiding mechanical dial problems. A changeover switch was installed to select one or the other.

The reader is referred to the author's previous articles in AR (June 1988 et seq) which dealt with capacitance meters. These were based on the principle that the current through a capacitor (at constant voltage and frequency) is directly proportional to the capacitance, thus the capacitance may be read as a current.

Reversing the procedure, if the capacitance is fixed, the current will be directly proportional to frequency. The voltage was fixed by deriving it from the output of a 4049 CMOS buffer (operating on regulated 12 volts) which is driven by the oscillator. Referring to the circuit, the frequency range is set by capacitor C_1 which is selected in decade steps by a switch, ganged to the oscillator range switch, also in decade steps.

The values involved are as follows:

Frequency range	Value for C_1
0-200 Hz	0.56 µF
0-2 kHz	0.056
0-20 kHz	5600 pF
0-200 kHz	560
0-2 MHz	56 pF (fixed & trimmer)
0-4 MHz (max)	27 pF (trimmer)

Thus the same 1mA meter, depending on the position of the changeover switch, reads either the generator output level or its frequency. The larger the meter dial the better the resolution, but in appearance it is probably better than most home-made dials. **ar**

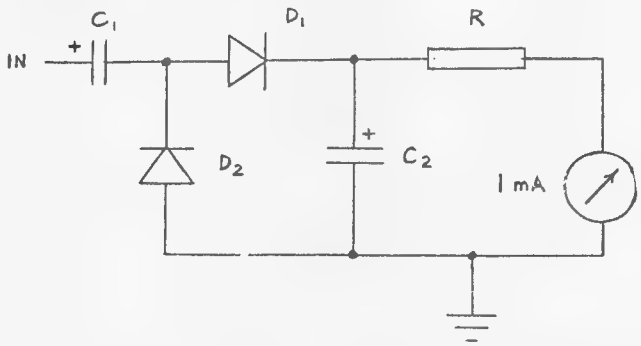

Item	Level meter	Frequency meter
C1	47µF 35V Ta	See text
D1, D2	Germanium	Germanium
C2	22µF 10V	100µF
R	1000Ω variable + 2700 Ω fixed	120 Ω (500 Ω variable across meter)

WORKING H.F. MOBILE? NEED A COMPACT H.F. BASE ANTENNA

MOONRAKER AUTO-TUNE ANTENNA SYSTEM

- Originally developed for long haul commercial mobile services the MOONRAKER AM318 Auto-Tune antenna puts the ATU components up in the air where they belong so that they become an integral part of the radiating system instead of being coiled up in a 'black box' somewhere.
- The 2.7M whip is 1/4 wave centre loaded at all frequencies with no base loading and no sliding contacts. It automatically retunes to the best SWR for any frequency in the range 3 to 18 MHz (other bands to order).
- The compact antenna control (interface) unit gives visual and audible tuning status and is suited to manual/automatic operation or located up to 20 metres away for base station use if desired. Just select the frequency and press the tune button, retuning time is typically less than 3 seconds.
- Impedance 50 OHMS (Nom).
- VSWR 1.8:1 Typical 1.3:1
- Power rating SSB-140W.PEP, CW 70W.
- Mounting - Anti shock mount with 12.7mm mounting stud.
- Construction - Anodised aluminium with a removable fibre glass top.
- Options - Scan, activates a wide band amplifier in the AE for receive scanning; H/D anti-vibration mount for rough roads: Top whip section spring for off road.
- Price - Complete system with 4M control cable only $749:00 plus sales tax 20%, if applicable. Air freight $23:00.
- Cheque, Bankcard and Mastercard welcome.

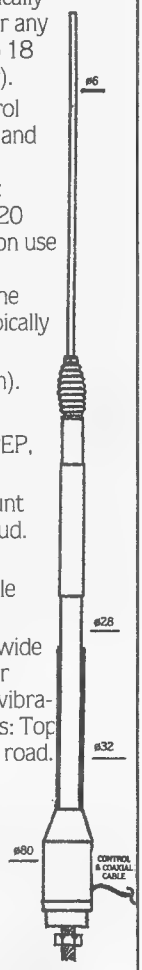

PHONE (002) 73 1533 or FAX (002) 73 1749 FOR SPECIFICATION SHEET

MOONRAKER AUSTRALIA PTY. LTD.

TASMANIA TECHNOPARK DOWSING POINT, 7010

TWENTY-FIVE JOTA BADGES THAT OTHERWISE WOULD NOT HAVE BEEN GAINED

KEN WESTERMAN VK5AGW RAILWAY VIEW BIRRIWA 2844

Whilst travelling around Australia last year I helped the Guides and Scouts with Jamboree on the Air in Derby WA. While I was performing this task one of the Guide leaders asked me would it be possible for the Brownies of the Air in the Kimberleys to join in. I then made enquiries with the local RFDS Base and was informed that it would bring up the Radphones Service free of charge for the next JOTA, if it was allowable to interconnect by telephone and a telephone patch.

Upon arriving back in Adelaide, I asked the SA WIA Council to back me in this task, which it did. I also asked for Federal backing at the Federal Convention in April. This was also given.

I commenced in February by approaching DOTC, Telecom, The Royal Flying Doctor Service in Adelaide and the 12 Schools of the Air. I also commenced to make a phone patch and the WIA-approved Line Isolation Unit.

The answers from the Schools of the Air mainly said they had had Brownies or Cubs of the Air, but they have folded as leaders are unprocurable. However, four centres, Derby, Carnarvon, Port Augusta and Broken Hill, still have groups that meet on the School of the Air frequencies.

The Department of Transport and Communication said it had no objection to the interlinking of the telephone service connected to Radphones to the Amateur Service for Jamboree on the Air.

Telecom connected two telephones to the WIA Headquarters at the Burley Griffin Building in Adelaide and made no charges for connection or the calls made (which included about 12 hours of STD calls).

The Royal Flying Doctor Base at Derby was the first base interconnected, and the Radphone service was voluntarily brought up for one hour.

Contacts were also made with Carnarvon, Broken Hill, and some children in remote areas of South Australia by telephone and patching to the Amateur Station in Adelaide.

Radphone in Port Augusta was brought up and we were interspersed with its telephone traffic as it is a 24-hour station.

Twenty-five children and three leaders of the Brownies, Guides and Cubs of the Air were thus brought into this year's JOTA for the first time.

It seemed to take a while to work through the members at a conventional JOTA station as the children all seemed eager to talk to Outback members.

The operating abilities of the children from the Outback were first class; no shyness at all. Their poor town and city counterparts, at double their age, on some occasions appeared to be faltering and possibly mike shy as well.

I found out you never say the word "over" without addressing it to the next operator by name, or you will find yourself listening to an Outback child and a townie talking at the same time.

Having a double radio link caused

Jamboree of the Air via RFDS and DRCS Saturday 21st October 1989. VK5WI Adelaide using phone patch to Radphones and DRCS* to lone Scouts, Guides, Cubs and Brownies of the Air. Operator Ken Westerman VK5AGW

001	0527	0600	14MHz	SSB	5/5	VK2BKU	Alison	Beverley Springs	RFDS Derby
							Tania	Mt Elizabeth	RFDS Derby
							Brett	Mt Elizabeth	RFDS Derby
							Naomi	Gibb River	RFDS Derby
							Kurt	Mowla Bluff	RFDS Derby
							Judy	Brown Owl	RFDS Derby
002	0732	0850	14MHz	SSB	5/6	VK2BPA	Kate	Wahroonga	DRCS Carnarvon
							Jenelle	Ullawarra	DRCS Carnarvon
							Matthew	Umbertana	DRCS Copley
							Bridgette	Umbertana	DRCS Copley
003	0850	0930	7MHz	SSB	5/6	VK5TV	Julie-Anne	Glenburgh	DRCS Carnarvon
							Suzanne	Glenburgh	DRCS Carnarvon
							Elizabeth	Edmund	DRCS Carnarvon
							Mandy	Edmund	DRCS Carnarvon
							Clare	Weedarrah	DRCS Carnarvon
							Penny	Weedarrah	DRCS Carnarvon
							Judy	Tawny Owl	Carnarvon
004	0931	0950	7MHz	SSB	5/5	VK5ABS	Judy	Tawny Owl	Carnarvon

*Telecom's Digital Radio Concentrator System

Jamboree of the Air RFDS and DRCS Sunday 22nd October 1989. VK5WI Adelaide using phone patch to Radphones & DRCS to lone Scouts, Guides, Cubs & Brownies of the Air. Operator Ken Westerman VK5AGW

005	0035	0040	14MHz	SSB	5/7	VK4SRC	Glenn	Nr Copley	RFDS Port Augusta
006	0145	0205	14MHz	SSB	5/6	VK4GCR	Lynnette Kathy Lill	Mutooroo Mutooroo Brown Owl	DRCS Broken Hill DRCS Broken Hill Port Augusta
007	0247	0340	14MHz	SSB	5/6	VK5TP	Colby Kirsty Francie Emma	Mutooroo Mutooroo Murtie Glenara	DRCS Broken Hill DRCS Broken Hill DRCS Broken Hill DRCS Broken Hill
008	0345	0405	14MHz	SSB	5/7	VK6AGN	Craig Nicole Jillyann	Minnipa Minnipa Camerons Cnr	Phone Minnipa Phone Minnipa RFDS Port Augusta

problems on a couple of occasions due to fading at one or both ends. The Outback children reacted well, by reducing their speech speed and were not frightened to ask for a repeat. This would be due to their schooling by radio.

The statistics of the weekend:

Five children from the Derby area through Derby Radphones.

Eight children from Carnarvon area by telephone.

Two children from Port Augusta area through Port Augusta Radphones.

Four children from remote South Australia by telephone.

Six children from Broken Hill area by telephone.

Eight Amateur JOTA stations worked.

The numbers were down in the Port Augusta and Broken Hill areas due to races being held in Broken Hill and a gathering at one station to celebrate the flowing of the Cooper over the Birdsville Track.

A meeting using the Telecom conference facility for the remote parents in the Carnarvon area was postponed so their children could take part in JOTA.

For the next JOTA it would probably be better done in the same town as the School of the Air (local calls only involved). Some Schools of the Air appear to have phone patches and others do not. This would not cause a great problem as phone patches can easily be put together.

I found having all of one group on Radphones and making contact with a conventional unit was the more efficient way rather than using the telephone with only one child at a time being connected. However, most Outback stations do have the DRCS telephone connected, and it could be used as a last resort if propagation was no good.

A telephone hooked in parallel with the phone patch was an advantage as prompting of the child if needed was relatively easy. A foot switch for press to talk was employed. VOX was not used as unwanted triggering was possible.

For this service to take place it was understood that there would be no expense to The Royal Flying Doctor Service, The Guiding and Scouting movements or the Wireless Institute. This was actually the case.

Without the tremendous help given by Telecom and the Royal Flying Doctor Service in Adelaide, Derby and Port August, the Outback JOTA section would not have been possible. **ar**

Jamboree of the Air via RFDS and DRCS Sunday 22nd October, 1989. Guiding & Scout leaders involved

Mrs Judy Barrett
Brown Owl
Beverley Springs Station
via Derby WA 6728
091 91 4646

Mrs Peta Smallshaw
Akela
Smally's Cafe
Derby WA 6728
091 9 1550

Mrs Judy Smith
Tawny Owl
c/- School of the Air
Carnarvon WA 6701
099 41 2237

Mrs Lil Martin
Brown Owl
5A Forster St
Port Augusta SA 5700
086 41 4290

Mr David Fitzsimmons
Akela
14/42 Forster St
Port Augusta SA 5700
086 41 0602

Mrs Sue Andrews
Brown Owl
Avondale Station
via Broken Hill NSW 2880
080 91 9412

Mrs Sue Allen
Guide Leader
Box 34
Broken Hill NSW 2880
080 2195

Mr Greg Warnes
District Commissioner
(Lones)
10 Fairbrother Drive
Happy Valley SA 5159
08 381 7766

Mr Peter Koen
SA Commissioner Scout
Radio
27 Hoskin Ave
Kidman Park SA 5025
08 356 6990

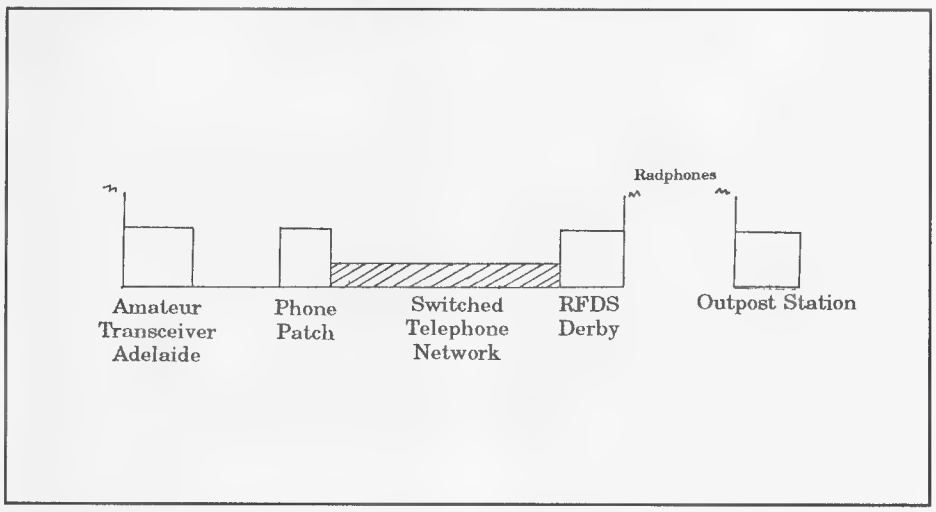

RECYCLED CONNECTOR CURRENT TESTER

STEVE MAHONY VK5AIM 19 KENTISH ROAD ELIZABETH DOWNS 5113

You have all at some time wanted to measure the current drawn by a piece of equipment from a 9V battery. This little device allow you to do it easily.

You recycle the connectors of two old/flat 9V batteries, about an inch (25mm) of 16 gauge tinned copper wire, and a high value 1/2W resistor eg 100k - 1M.

As per diagram you link two different contacts (cup and stud) with the inch of TCW. The other two contacts are joined by the high value resistor.

To check the current you remove the battery clip from the battery, clip the "Tester" on to the battery and then clip the battery on to the other side of the "Tester". A multimeter can then be clipped on to the resistor the correct way around and used to measure the current drawn by the equipment.

The high value resistor simply acts as an insulator and the current flows through the multimeter. Most pieces of equipment running on a 9V battery only draw 10-20 mA, and very little current flows through the resistor.

On one model I bent hairpin loops in the resistor leads to facilitate meter connections.The units I have made are all popular, especially when connecting up prototype equipment or faulty gear.

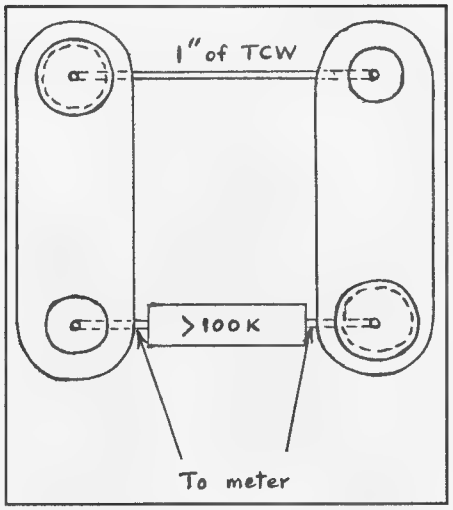

NOT MORE OF THE USE IT OR LOSE IT SYNDROME!! HERE WE GO AGAIN!!!

PETER MCADAM VK2EVB 14 GRANT CLOSE COFFS HARBOUR 2450

The subject, "Are we (the amateurs) losing the 10-metre band?"

This is becoming so serious it's not funny any more and the author thinks all amateurs should take a good look at this topic and their individual operating practices.

Have you used 10 metres lately? Does the propagation favour 10 metres at this time of the sunspot cycle? Why not, have you checked? Have you ever worked DARE I SAY IT . . . CW on 10 at all? What about the FM or SSB sections? Have you ever, ever used 10 at all since gaining your amateur licence?

If you can only answer NO to the above questions, are you one of the ever-increasing number of amateurs who couldn't care less about the illegal encroachments into our band space or are you prepared to do something about it?The sad thing is that many amateurs can answer yes to many of the above questions, but still only use 10 metres occasionally when reports of real DX are heard.In between times 10 metres is left to the devices of mostly novice licensees who watch the band very keenly for openings.

It seems to me that an increasing number of VK amateurs don't seem to care what happens as long as nothing interferes with the 20-metre and the two-metre amateur bands. (Now that the novices on two metres dispute has settled). "Who cares about the 576 MHz band, we weren't interested in ATV anyway," some say. Others reply with, "So what if 70cm is likely to come under threat, we don't have any gear for that band anyway." Comments of, "23cm (expletive deleted) equipment would be too touchy at that frequency" are sometimes heard. And even the "No-one uses 160 metres now, that's old hat" line is dragged out. Packet's only for computer freaks and CW is for old timers and so it goes on.

Could it be that Bluey, the average VK amateur, is becoming too lazy or too complacent for his own good? Does he have it too good? Is Bluey suffering from living in an insulated world, shut up in his shack, only working the same contacts year in, year out, and having a point of view no larger than this seemingly closed environment will allow? Yes, I believe so, and, what's more, it will be the downfall of our hobby.

"What is this author leading up to?" you will be thinking by now. Well, here is a history of what is now a well developed problem. Of recent times, with the increase of propagation on 10 metres, an

alarmingly large number of AM signals has been observed. These appear quite regularly every 10 kHz from below 28 MHz right up to 29.7 MHz, if not higher. There are also many SSB and FM signals as well as suspect RTTY and data signals. While many of the speech transmissions, judging by the direction of propagation and language used, seem to emanate from Asia, Indonesia and the Pacific islands, an alarming number with Australian and New Zealand accents has appeared.

"They have only just started to appear!" some amateurs exclaim. But is that really the case? Of course not; this growing army of illegal operators has been at it for years. Disguised under the cloak of poor radio conditions, they have moved into the 10-metre amateur band unchallenged, and now are staking a claim. Many appear to have quite sophisticated equipment, too, not just your ordinary garden variety modified CB radio.

The general apathy amongst a large proportion of amateurs is not helping either. Many of you will say, "Can't do much about it" or "What can I do by myself" when approached about the problem. Many more just throw their hands in the air, turn a blind eye and use other bands as if the pirates have rights there on 10. Others say let's do something, but what? And so it goes on and very little is stopping the pirates from taking over.

Just to make it clear, 10 metres is a PRIMARY amateur band.That means nobody but amateurs may use it but, if we keep going the same way, the commercial sector may think it can move in on other primary amateur bands. Then what would we do? The commercial sector has the finance to go to the high courts and probably win. "More doomsday predictions" I can hear many amateurs say, but are they really?

Let's look at some of the causes.

1. Obviously the ease of obtaining suitable equipment must be looked at. Sure every electronics and motor accessory shop, as well as many large chain stores, sells cheap CB radio equipment, but how many of these buyers really know much about performing modifications to this gear? Not many, it seems, but they can soon find someone who does.

2. There are certain books on the markets that explain to you (with the aid of diagrams) how to modify existing CB equipment to gain more channels or to install VXOs (sliders etc) to enable access in between channels.

3. By far the biggest problem has been the easy access that the non-amateur has had in the past, not only to second-hand amateur gear, but also the newest and latest equipment.

4. It seems that some people, no matter what the cost, are able to buy and use what equipment they want to.

5. But the biggest part of the blame lies with us amateurs. "Explain yourself" you say, or "This bloke is nuts", and similar statements to the same end.

Well, to deal with the last of these statements first, we the amateurs of, not only Australia, but the world, are to blame. "Why?" you say. Well, just to start with, who could have the most say (through amateur bodies like the WIA and ARRL etc) about government legislation designed to limit the sale of both new and used amateur equipment to unlicensed persons? The author has never once had to produce proof of licensing when buying new or used equipment to start with, so how many non-amateurs have bought the same way? If we amateurs had to notify the DOTC or appropriate government body, to whom we sold our second-hand equipment and when, it would possibly go a long way toward limiting access to non-amateurs. This would also remove the temptation from amateurs like you and me to sell to non-amateurs because the price was right (which, I believe, is getting pretty common).

If the government can censor the contents of movies and books available to the public, why not limit the sale of books of CB modifications to licensed amateurs only, to allow us and only us to use ex-CB equipment on our bands. Also, perhaps the limiting of the sale of amateur books in general to licensed amateurs may be possible but would undoubtedly upset SWLs. If this was done, some allowance for prospective amateurs would have to be made to allow them to study for their examinations. Suitable laws could be proposed and passed to prosecute shop owners proven to be selling these publications and equipment to non-licensees.

All this may help prevent further attacks on our bandspace,but the biggest impact of this situation could be made by every amateur, whether novice, combined limited/novice or full call by actually using the 10-metre band (according to licence provisions only) and, by doing so, declaring our territory. It's very simple really, and it works like this: instead of clogging up 80 metres or a two-metre repeater, chatting to a local group of friends, and possibly creating QRM to others engaged in DX or interstate contacts, why not consider using 10 metres where you can have the convenience of virtually no static, a lack of QRM and plenty of bandspace with which to experiment? Why not hold a weekly club net on 10 metres, perhaps a CW practice session, and other activities, but mainly just use the band?

That doesn't mean you have to have contacts all the time, even just monitoring and logging details of suspicious stations can be helpful. These details can then be forwarded to the WIA Intruder Watch Co-ordinator in your state and the DOTC which will assist them to make use of existing local laws and/or the necessary political overtures to whichever country the interference is emanating from. If two amateurs, while communicating on another band, can by using beams get a map reference, and take a recording of the transmissions, these could be submitted to the DOTC and evidence accrued. Of course, it is a very difficult problem for the DOTC to handle with its limited manpower and the low priority rating of this matter, but priorities can always be changed depending how much mail, publicity and exposure is given to the particular subject in question.

Be careful though, the author is not advocating direct actions or radio contacts with these pirates as it could lead to verbal abuse and ensuing litigation from said pirates or DOTC, as one could easily be in contravention of the Radiocommunications Act. So the message is to "tread lightly, listen quietly and arm the authorities to swing the big stick", rather than going it alone. If every amateur in Australia, or even the world, was able to agree on this one point, imagine the power we would hold and the good we could do for our hobby.

So, keep your ear to the ground, or rather speakers, and help preserve our hobby for the years to come, by reporting intruders. A little work now could save much frustration in the future. **ar**

REMEMBER TO LEAVE A THREE SECOND BREAK BETWEEN OVERS WHEN USING A REPEATER

THE NEWCASTLE EARTHQUAKE DISASTER

By Philip Greentree VK2IW

Australia's first fatal earthquake occurred at 1027 hours on 28 December 1989. It was a disaster for which there was no warning in a land that is the World's oldest continent and presumably the most stable. Although only at 5.5 on the Richter scale, the earthquake had devastating effects on the City of Newcastle, the sixth largest in Australia. The effects were made worse by the many inner city buildings that were up to one hundred years old, and constructed from single and double cavity brick. Twelve lives were lost and the damage bill exceeds 600 million dollars. Yet that is not the end of the damage. Many hundreds of people are still returning from summer vacation only to find their homes although still standing, are destroyed internally.

Amateur Radio Operators as part of WICEN...the Wireless Institute Civil Emergency Network... played an important part in supporting the disaster recovery efforts of the recent earthquake that destroyed much of the inner City of Newcastle in Australia.

Thursday 28 December 1989 was like any other summer day in Newcastle; a beautiful start to the day, fine and heading for a temperature in the high twenties centigrade. Small groups of post Christmas shoppers were taking their time since there was no need for rush at this time of the year.

Many were at the beach, surfing, sun bathing; others of an older age were at the Newcastle Workers Club for the weekly Bingo game, a mecca for the City's senior citizens. Starting at 1030 AM, the Bingo had for the first time in years been moved from the main auditorium to an ancillary room because numbers were down due to holidays.

The housie game never started, the shopping was not completed; at 1027 AM, an earthquake of strength 5.5 on the Richter scale struck the Newcastle region. Centred 13 kilometres beneath the Newcastle Western suburb of Cardiff, the earthquake, not large by world standards, changed the lives of Novocastrians for ever. The devastation caused by the tremor was made worse by the age and brick construction of buildings in the inner city areas. Worse again by the fact that much of the area was built on low lying former swamp lands that don't provide for solid foundations.

Foundations had never been a problem in the past, Newcastle wasn't in an earthquake zone was it?

In an instant, twelve people were dead or dying from horrific injuries, more than 150 more were suffering varying levels of injuries.

The main shopping street of the inner suburb of Hamilton was a disaster area. Shop front awnings had collapsed onto shoppers inflicting dreadful injuries. News was spreading rapidly that something was dreadfully wrong at the huge Newcastle Workers Club; the club's top level concrete floor had crashed on to the floor below, crushing to death nine people. Four large hotels were destroyed, schools collapsed, many fine historical buildings wrecked and hundreds of homes smashed beyond repair, thousands more suffering all levels of damage.

Thank goodness it was the Christmas-New Year holiday period and so very many were away on holidays. Thank goodness all the schools and colleges were closed for vacation.

As soon as local operators arrived at SES HQ they were assigned to one or other of the many rescue crews being dispatched as soon as they were formed. Many of these crews were volunteers that just "walked" in off the street. There were no radios in their trucks and WICEN was able to step in to the breach. The 146.775 MHz 2m repeater had been formally commandeered under Dennis' call sign VK2XDW. This was done since his call was familiar to all Newcastle operators and it was not till late on Friday that the call sign VK2WIH was used.

The scenes of devastation were heart breaking. The author was despatched with a crew to the Cooks Hill-Junction area, and the sights that confronted him were beyond belief. Broken home after broken home, neighbours asking for help because they thought someone was trapped next door. All around were people who just couldn't come to grips with what had happened.

Floods and bush fires give warning, there is time to prepare, but an earthquake just happens, no warning, just the whole world shaking as your life's labour, your home, your work, your reason falls down round you. After it's over, all that remains is the devastation, the dust and the cries of the shocked and injured.Australians are a resourceful people, and soon people were moving their possessions out using their own vehicles, friends and rented trucks. **Yet no looting**...what a godsend. But this was Newcastle, and Novocastrians don't loot, it's not in their or any other Australian's nature. There was a job to be done, and it was. Amazingly there was no real panic, other than in the isolated individual. To a man, three hundred thousand Novocastrians pulled together and worked as one.

At this stage it must be pointed out that WICEN's presence was only a token one. VKs 2XDW, 2HT and 2KEI were the only local members, the rest of the operators were all volunteers who were demonstrating just how well trained and self disciplined the amateur radio community is in Newcastle.

Geoff VK2GL was despatched with a structural engineer from the NSW Electricity Commission, and they worked as a team all through the night.

VKs 2CD,2CRR, and 2AVO were amongst the early arrivals that WICEN coordinator Dennis VK2XDW immediately despatched to the field with SES rescue crews. The family team of Keith VK2AKH and son Alan VK2MGL weren't far behind, Keith spending his time in the field, whilst Alan spent many long hours doing the paper work by assisting the net controller.

That night it became obvious that the SES controller was in need of a contact person between him and the public and media. The amateur radio operators set up a health and welfare unit in an adjacent SES building. This team, led so ably by Keith VK2AKX, took over responsibility for welfare enquiries from the public, and handled all press releases on behalf of the SES Controller. Keith made an

excellent media officer and was very ably supported by VKs 2CRR and the husband and wife team of 2AVO and 2DBL. Denis VK2XDW was able to locate a FAX machine and the team was on the air.

As it eventuated, the choice of Keith for this job was providential since the world-wide media tried to turn the show into a zoo. Calls came in from all over the world and every one wanted details of the massive looting they claimed was happening. There was no better person to take on the media tigers and Keith put them straight from the start. There just was not any such thing happening and Keith literally had to battle caller after caller who tried to put the words into his mouth. In Keith they had met their match and he told it exactly as it was.

One thing that impressed international experts in earthquake recovery was the way the authorities so rapidly blocked off the Central Business District and inner suburban areas, thus keeping sightseers out, making the job so much easier for rescue teams. With so many streets into the city, and so many barricades needed, there were just not enough police to go round until reinforcements were rushed in from Sydney and other parts of the state. Amateur radio operators manned a number of the barricades providing a radio link as required. Many police were walking round with mobile phones, but the telephone system was so congested that they were basically useless. As army and police reinforcements arrived, the several Amateur radio operators involved were taken off barricades and re-assigned to rescue teams..

A city unused to earthquakes results in considerable confusion, many unbelieving; what was it really? Local Amateur Radio Operators switched on their 2m HTs or mobiles and compared notes. It was an earthquake, yes there had been considerable damage, people had been killed, many of the amateur's own homes damaged, but just how bad was it ?

Dennis VK2XDW the local coordinator for the Wireless Institute Civil Emergency Network (WICEN) lives in Mayfield, a couple of kilometres from the city centre. He was quickly mobile and stunned by what he saw. The huge Newcastle Technical College where he is a teacher was a wreck. The nearby Parkview Hotel was collapsing and all around were people milling in a state of confusion. Just down the road was Hamilton — shattered. Dennis was stunned but realised that a major emergency had started. With all power and telephones out of action, it was obvious that Amateur Radio would be needed.

He proceeded to the State Emergency Services headquarters at the other end of the inner city and found emergency workers were assembling for duty. Alderman Don Geddes, the area controller of SES, immediately informed Dennis that WICEN had been activated and that every available radio amateur was needed.

Newcastle Workers Club

Only when Dennis announced on the 2m repeater frequency 146.775 MHz that WICEN was activated and that every assistance was needed, did the reality of the situation dawn on us all.

Thus began the largest disaster relief action ever undertaken by the volunteer State Emergency Services, WICEN and amateur radio. It was one of the largest emergency activations of amateur radio in Australian history. This wasn't an exercise, it was the real thing. Immediately, local amateurs responded and raced towards SES headquarters. The majority of the sixty-three that responded were untrained and not members of WICEN, but in a manner that is so typical of the great, proud City of Newcastle, there was a job to be done. No time for questions, are you a member? are you trained? did you bring the paper work? No time, just go to work.

And go to work they did.

Ray VK2TV from the City of Gosford, seventy kilometres to the south, and a radio controller for the Volunteer Rescue Authority was sent by the VRA directly to the Newcastle Workers Club to set up a direct link with their HQ in Sydney.

Dennis VK2XDW dispatched Graham VK2FA to the Newcastle Workers Club to provide a direct HF link from his mobile to the WICEN station at Police Rescue HQ in the Sydney suburb of Marrickville.

Thursday evening saw Brian VK2YBC take over net control and quickly establish himself as a true professional on the microphone. All through the evening and into the long hours of the night, Brian's crisp, clear and authoritative voice dominated the air waves. It was a tribute to Brian that only rarely did messages need repeating, and even then only because field personnel using HTs were in a shadow area.

Hamilton Telephone Exchange had taken a battering and had been cleared, staff unable to return to the building for several hours. During that time local telephone links were out of action. When the telephones were restored, the congestion was so great the public phone system was next to useless for a long time.

Amateur radio was for a time the only link between the Royal Newcastle Hospital and the outside world. That hospital had taken a battering, two main wings being damaged so badly they will never be used for hospital work again. Faced with a loss of 250 beds as a result, and with the Mater Hospital ten kilometres west suffering damage also, things for a while were very grim as casualties continued to pour in. For a time WICEN was passing emergency messages from that hospital to Sydney.

By Friday it was obvious there were just not enough local amateurs since many were away on holidays, so when WICEN Sydney asked if help was needed, the answer was an emphatic yes. In no time, VKs 2DLY, 2CKD and 2EMU were on their way, others following over the next few days.

Still more Amateur Radio volunteers were coming from Sydney and the Central Coast areas to the South, the Hunter

Beaumont Street Hamilton. First aid just after the earthquake.

Valley to the West and Port Stephens to the North. Newcastle hams who had been away on holidays were returning to lend assistance.

The workload was enormous. In the six days from the time of the earthquake, the State Emergency Services handled more than 4000 individual calls for help, hundreds of these being passed in by Amateur Radio Operators attached to SES teams in the field. It wasn't that the telephone system, one of the World's most modern, couldn't handle the work load, there just weren't enough lines into SES headquarters.

As if all concerned were not working at top capacity on Thursday night, an urgent message was received from the Newcastle police. Despite all the excellent work carried out by the police, it had been discovered that there was no list of victims and their injuries etc. Six competent people were required immediately for the task of registering all the disaster victims. Six amateur radio operators immediately volunteered for the job and led by Dave VK2DFL, they worked into the early hours and registered every earthquake victim, in all the region's hospitals.

When that job was complete, they came back and went out on further emergency work.

With responsibilities for radio net control of a considerable proportion of the SES rescue effort, media relations and welfare, Disaster Victim Registration, and every available operator in the field, the WICEN group was doing fine. In fact, if we had known that the region's ambulance service had lost its central communications room, we could have placed a great number of operators in individual ambulances until an emergency communications unit arrived from Sydney later in the day.

Mobile cranes and "cherry picker" lift devices were rushed into the rescue efforts but their commercial radios being on different frequencies to emergency services posed a potential nightmare. WICEN immediately despatched operators to each of the vehicles involved and was responsible for their control for the remainder of the emergency.

By the following day (Friday), tiredness was starting to show as a problem, but there was no respite. New operators arrived only to be immediately assigned to the field with rescue crews. Brian VK2YBC was falling asleep at the microphone, and Greg VK2GJS very capably relieved him for many hours, whilst Brian found a stretcher somewhere to have a sleep.

Already there were stories developing that would become news worthy. A short time after the quake, two nondescript characters arrived at SES HQ in a battered, old Ford van and said they had picks, shovels and themselves, and wanted to help. The SES controller promptly called them the "Argy Mob", after the Western suburb of Argenton where they came from, asked if WICEN control could assign a radio operator, which was done, and sent them into the field.

"Tas", "Darren" and WICEN operator Kevin VK2CKD from Sydney came back four days later, the stuff of legends. Stopping only for a bit of sleep when they really needed it, they worked on. As they finished allocated jobs, in would come a call via 2 metres for a list of more jobs. They demolished dangerous chimneys, covered up shattered roofs, propped up shop awnings about to fall and worked, and worked and worked.

The Australian military forces were activated on Friday with the 14 Field Squadron of the Royal Australian Regiment moving into the disaster area. Whilst the army has tremendous communication capabilities, all their frequencies are incompatible with civilian services. Within a short time, a group of Radio Amateurs had been dispatched to link the army with SES HQ. With so many army teams in action, they themselves experienced communications problems, and the need for a radio link between 14 Field Squadron HQ and the many field units resulted in further Radio Amateurs being dispatched to form a separate 2m network.

The army group's commanding officer was amazed and deeply impressed at the level of communications mounted by these civilians. He was equally surprised at the level of sophistication of the equipment in use and the professional standard of supposedly amateur operators.

Whilst Geoff VK2GL was providing radio support for council engineers in the damaged Cooks Hill area, he was approached by local residents who reported their fears for an elderly man trapped in a local terrace house. The front door had to be broken down to gain entry, and the inside of the house was found to be a shattered mess, destroyed beyond repair. Only then did they hear the faint sounds of sobbing. A frantic search found the elderly gentleman, fully dressed, two bags packed with clothes, sitting on the toilet seat, the ony part of the house that had remained intact. He had survived the collapse of his house the day before, packed his bags, sat down for a rest, and at that point went into shock. There he had sat, through the night and into the next day, uncomprehending of the disaster that had struck Newcastle and himself. A radio call from VK2GL to WICEN control soon had the Salvation Army social workers on their way to help the man.

The backbone of the Amateur Radio operations were 2m hand helds and it was quickly becoming clear that the old basic HTs were superior to some of the newer Microprocessor controlled devices. Digital paging systems located on 149 MHz were severely interfering with many of the HTs, but not so a group of fifteen year old Icom HTs.

Running on dry cells the Icom HTs worked perfectly. Others using nicad batteries quickly showed their uselessness in a disaster situation. When nicads die there is no warning, and when they

What used to be the Newcastle RSL Club Perkins St Newcastle

do, how does one recharge them when in the field during an earthquake disaster? There is no doubt that dry cells are the recommended way to go in a disaster.

Through Friday night the recovery continued and Saturday saw the urgency of the rescue efforts slowing down a little as all living persons trapped in the wreckage were believed to have been found.

By Saturday the WICEN team was nearing exhaustion. Coordinator Dennis VK2XDW was stood down with others for rest. The author, who had at last got some sleep during the night, spent the next twelve hours on the control mike, giving VK2YBC a much earned break.

Other net control operators particularly those who worked the night shift, included Dave VK2DFL, Andy VK2MHO and Neville VK2HT.

As if WICEN didn't have a full enough slate, news arrived that engineers were being flown in from all over Australia, to assist the Newcastle City Council in assessment of damage. There were not enough council radio cars to go round, so WICEN was requested to supply a team of operators to go with these out of town engineers.

Another repeater was needed to run the engineer network, so the other Newcastle 2m repeater on 146.900MHz was commandeered for the duration and the call sign VK2WNC used.

The team of amateur radio operators sent out with the council engineers proved invaluable. One visiting New Zealand born earthquake consultant could not believe there were no radios in the various cars used. He was not only greatly relieved but when a team of amateur radio operators arrived, but full of praise for their performance, as was the Newcastle City Council. A very dangerous situation developed at one demolition site and only the presence of an amateur radio operator allowed the engineers to pass the details back to the City Council HQ.

WICEN and its volunteer amateur radio operators had established quite a reputation, to the extent that operators were being sent by SES on reconnaissance to report on damage to determine what action and what type of disaster teams should be sent. Tony VK2BOA, a local dentist, was in the thick of it in the suburb of Stockton as he reported on damage. He soon linked up with some council engineers who had been dispatched without radios.

Back at SES HQ, various problems had developed. All existing report forms were in foolscap format whilst the paper in the photo-copier was the new Australian standard A4 size. No worries, WICEN redesigned the forms on the run and produced hundreds more copies.

During Saturday, Dennis noticed that the SES data base operator was falling asleep at his PC. It eventuated that he had been at his station, non stop, since Thursday. Added to that, the data base was giving problems and the operator was too tired to solve them. VKs 2XDW and 2IW quickly arranged for D-Base III experts to come in at short notice from the University of Newcastle and the Newcastle Technical College. Within hours, there was a team of over twenty-five IBM PC experts at work.

All those operators on one PC? Not for long since Phil VK2EPB, the Newcastle manager for Wang Computers promptly obtained a quantity of IBM AT compatibles from his office and the team went to work with gusto.

SES night shift radio operators were rather thin on the ground by that night also. As a result, WICEN operators manned both group's radios during the long hours for the next four nights.

Most WICEN personnel gained some sleep at last on Saturday, but it wasn't long enough. All too soon it was Sunday and a New Year's Eve like none before in this city. No one had ever experienced such a concentrated fifty-six hours of non-stop work. The SES crews like so many aspects of Australian life were all volunteers, their wives running the ca-

The George Hotel, or rather, what was left of it. Cnr Hunter and Watt Sts Newcastle

tering team that fed the "troops" so well.

The SES welfare teams were near exhaustion by Sunday, so a very early morning wake up call had Ruth, VK2IW's wife, out of bed. Ruth, who works in the therapeutic diets department at the Royal Newcastle Hospital had been on holidays and was now needed to help feed several hundred tired and hungry volunteers. She quickly arranged for her daughter Betina and a friend to go with her. They were joined by VK2CRR's wife Joan who had commercial cooking experience herself. What a team, what a performance, it must have been the first time any disaster team had been treated to haute cuisine. The four of them prepared an estimated eight hundred meals that day and had the troops lining up for more.

Those that couldn't make it in from the field, had hot meals taken to them.

Monday saw a repeat performance to the great delight of the SES and WICEN workers.

It was announced on Sunday afternoon that the following day, Police would be setting up a special centre outside the main disaster area for the issuing of passes enabling residents and businesses limited entry to the disaster area. Entry was to be permitted only if the relevant building was safe. This meant a radio link with City Hall was required, since that was where all required information such as ownership and damage status was obtainable.

WICEN was called on to perform the communications task and a third repeater was needed. A new unit for 147.100MHz which had been on trial with radio engineer Peter VK2ZRT prior to installation was pressed into use in Peter's workshop that had survived the earthquake. Using the call sign VK2WSC hundreds of messages were passed to and fro throughout Sunday and Monday by VKs 2EMU, 2DLY and 2BOA.

The city council end of the link involved a base station being set up on the top floor of the council HQ building, the other end of the link being situated in the police control caravan located at the International Sports Centre. The following day, the caravan was moved to the Broadmeadow Race Track, the WICEN team going with it. Later that day, Telecom established a direct computer link with council HQ and the radio amateurs were no longer needed, returning to SES HQ for re-assignment to other work.

Peter VK2ZRT did a tremendous job as he repaired equipment that had failed in the field. Loan equipment enabled much needed operators to stay in the field with borrowed equipment.

By Tuesday it was becoming obvious that the dust was settling, all bodies had been recovered, and the disaster rescue emergency was over. It was time to go, and leave the situation to the mop crews, so WICEN and its volunteer team of sixty Amateur Radio Operators were stood down on Wednesday 3 January 1990 after seven non-stop days of plain hard work.

Several people in particular stand out for the incredible job they did. Dennis VK2XDW as WICEN Coordinator showed his ability as a "fire fight" commander. Brian VK2YBC shone as WICEN's top line net controller working tirelessly and Geoff VK2GL did wonderful work liaising with the City Council, Police, Army and establishing the two secondary repeater nets. Keith VK2AKX was the ideal person for his job as media liaison controller, in fact, he was brilliant. It is sad to record that Keith has since become a silent key (see obituary in April AR p54).

That leaves a further sixty or so VKs plus several of their wives who worked non stop throughout the emergency. For seven days the author was proud to be an Australian radio amateur and there is no doubt that an example of selflessness and organisation has been set for amateur radio in Australia.

It was interesting to note the extraordinarily high level of good behaviour shown by the amateur community. At no stage was there anything other than exemplary self discipline demonstrated on the repeaters and various nets used.

Since the earthquake, Hunter WICEN has been reformed and is now a vibrant group recognised by the local authorities. WICEN (NSW) has been formally accredited as a specialist rescue support group, as part of the NSW emergency services plan.

The only recognition that WICEN and the sixty Radio Amateurs whose communications skills had held a good deal of the rescue effort together for so many days have received, is a single letter from the Lord Mayor of Newcastle. No other official recognition for the work performed by amateur radio has been received. Despite the extraordinary role Amateur Radio Operators played in the disaster recovery efforts, there has been NO other mention of recognition for the work done on behalf of the SES, the police and other services etc.

Australia must be the only country that doesn't realise what amateur radio involves. Could it be many Australians don't understand the difference between the HIGHLY QUALIFIED, FEDERAL GOVERNMENT EXAMINED Radio Amateurs and the technically UNQUALIFIED CB radio fraternity?

Is the word amateur a misnomer? In the context of amateur radio, "amateur" means the operator does not receive payment as distinct from a commercial broadcaster. Yet Amateur Radio operators form the largest group of TECHNICALLY QUALIFIED radio operators with a LEGAL allocation of radio frequencies second only to the Australian Army. Few realise that Radio Amateurs are licensed to not only transmit Television, Voice, Teletype, Computerised digital data etc, but to BUILD their own equipment as well.

They provide the community with an emergency service (WICEN) that has immediate access to over a hundred million dollars worth of communications equipment.

In the USA, the Soviet Union and a great many other countries, amateur radio is a breeding ground of future Electronic and Electrical Engineers. Why the difference in Australia?

Whilst not complete, the following is a fairly comprehensive list of amateurs known to have worked with the emergency team.

2AAB, 2AAM, 2AGB, 2AGS, 2AKH, 2AKX, 2APE, 2AVO, 2BFE, 2BOA, 2BQY, 2BZD, 2CD, 2CKD, 2CRR, 2DBL, 2DFL, 2DLY, 2DPY, 2EBA, 2EMU, 2ENG, 2EPB, 2FA, 2FAB, 2FJS, 2GG, 2GJS, 2GL, 2GN, 2HT, 2IW, 2KAP, 2KBL, 2KFU, 2KLM, 2KLX, 2KTV, 2MHR, 2MGL, 2MHO, 2NJC, 2PFQ, 2TKW, 2UI, 2XDW, 2XJD, 2XJD, 2XJG, 2XKM, 2XQJ, 2XRS, 2YBC, 2YXM, 2ZJC, 2ZNB, 2ZPH.

ar

AR 20 Year Index

IBM Format 5 1/4 inch floppy disk

dBase III Plus .DBF file	$10.00
ASCII	$10.00
Compiled .EXE file	$10.00
36 page printout	$5.00

Prices include disk (where applicable) and postage.

AR 20 Year Index
PO Box 300
Caulfield South VIC 3162

INTRODUCING THE NEW MINISTER

BY JIM LINTON VK3PC

Kim Beazley MHR has taken over the super Ministry of Transport and Communications at a time of great change and plenty of challenges.

Mr Beazley entered Federal Parliament as the Member for Swan in 1980, and was appointed Minister for Aviation and Minister Assisting the Minister for Defence in the first Hawke Government. At the time he was the youngest member of the ministry. He also later served as Special Minister of State, and was Minister for Defence (1984-90).

In his new posting Mr Beazley has to deal with a range of developments in the area of communications. These include

Mr Kim Beazley MHR
Minister for Transport and Communications

the switching by some AM broadcast stations to the FM band, expansion of the Special Broadcasting Service, and growth in the number of community broadcast stations.

Aspirants for community TV licences were certain to try their luck with the new Minister after having been put on hold by his predecessor, Ralph Willis, as high priority matters in communications were addressed.

The momentum for deregulation of telecommunications is speeding up with vested interests pushing for greater relaxation. The independent telecommunications regulatory body, Austel, recently came out in support of new players in the field of cellular mobile phone services to operate in competition to Telecom's monopoly.

The Federal Government's embargo on pay television is due to end in September, thus leaving the way open for cable TV or radiated subscription TV. And the possible introduction of high definition television (HDTV) also has to be considered. The second generation of satellites for the financially ailing domestic satellite company, Aussat, is an important issue sure to attract a lot of attention in coming months.

The Department of Transport and Communications is busy dealing with an ever-increasing demand for new uses of the radio frequency spectrum. It also has to continue its progress towards setting standards aimed at alleviating potential electro-magnetic compatability (EMC) problems. The department is also preparing for its participation in the World Administrative Radio Conference in 1992. **ar**

BOOK REVIEW

ALL ABOUT VHF AMATEUR RADIO

JIM LINTON VK3PC

This publication, written by Bill Orr W6SAI, is sure to be a good seller because of the information it contains and the author's proven simple writing style.

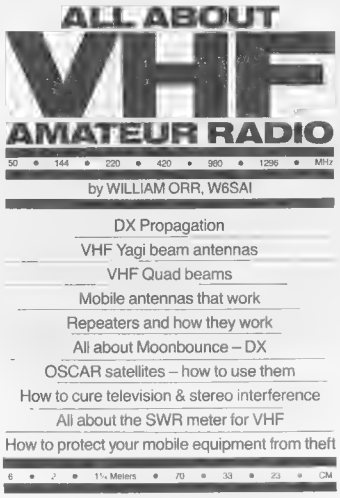

Bill is well known for the other books he has written, co-authored or edited about antennas of all types. His newest book covers six metres, two metres, 70cm, the USA 33cm (902MHz) band and 23cm.

Rather than being dedicated to the construction of receivers and transmitters, it deals with the principles of operation, propagation and effective antenna systems. The text is aided by useful drawings or pictures which appear on nearly every page.

There are 10 chapters providing information on important aspects of VHF radio and references to other publications for additional information outside the scope of this book. The chapter titles are: VHF Propagation; The VHF Bands — an Overview; the VHF Repeater and How it Works for You; VHF Moonbounce Communication; and Amateur Satellite Communication. Other chapters are: Almost Everything about Coaxial Lines; VHF Vertical and Mobile Antennas You can Build; and VHF Interference and How You Can Suppress It. The final chapter, VHF Roundup, deals with sundry matters including SWR antenna checks, the care of Nicad batteries, and how to protect your mobile gear from theft.

The book includes a brief history on the VHF spectrum from the earliest experiments of Hertz and Marconi, through to the post-WWII boom in its use. The chapter on OSCAR satellites and how to use them also gives an historical perspective on this aspect of our hobby.

The use of imperial measurements in the book should not cause Australian readers too many metric conversion headaches.

All About VHF Amateur Radio is suited to the newcomer wanting to dose up on easily consumed encapsulated information, the established hobbyist seeking to expand or update knowledge, and is a comfortable, interesting read for those not technically inclined.

It can now be obtained through the WIA Divisional Bookshops. **ar**

SUPPORT THE ADVERTISERS WHO SUPPORT AMATEUR RADIO MAGAZINE

FT-1000 HF ALL MODE TRANSCEIVER

YAESU

THE BEST OF THE BEST

Attention all serious HF operators! To be a truly WORLD CLASS operator during these times of crowded band conditions, you've got to have a truly WORLD CLASS rig...and the rig you need is arriving in Australia very soon. Of course we're referring to the versatile new YAESU FT-1000.

The FT-1000 is the product of 3 years intensive research and development at YAESU, resulting in a highly reliable, fully featured, yet easy to use HF transceiver. It's bound to blow away your competition with its spectacular combination of power and operational flexibility. Compare!

Direct Digital Synthesis (DDS)- Two 10 bit DDS plus three 8 bit DDS provide fast lock-up times and lower synthesizer noise than traditional PLL systems. Using DSS's means a cleaner transmitted signal and improved receiver performance.

High RF Output Power- Continuously adjustable output from 20 watts to a mighty 200 watts is under your control. A built-in blower sees that high duty cycle transmissions take place quietly and efficiently.

Dual Channel Reception- Utilising independent VFOs and digital displays, reception can be in different modes, on different frequencies, with different IF bandwidths. An optional Bandpass Filter Module (BPF-1), will allow cross-band dual-receive using two antennas.

Ultra-High Performance Receiver- It provides all-mode coverage from 100kHz to 30MHz with a dynamic range of up to 108dB. Selectable filters for the following frequencies are fitted as standard: 6kHz, 2.2kHz, 1.8kHz, 500Hz, 240Hz. The QRM rejection systems include cascaded IF filters, IF width and shift controls, IF notch filter, a variable noise blanker, and CW audio peaking filters.

For the full story on the incomparable YAESU FT-1000, contact your local Dick Smith Electronics store for your copy of YAESU's 12 page full colour booklet.

Sneak Preview!

To celebrate the opening of the expanded Ham Shack at our Bourke Street store (Shop 20, Midtown Plaza, 246 Bourke St., Melbourne), we will be holding an FT-1000 'Demo-Day' on Saturday, 16th of June 1990. Drop in any time from 9am till 4pm and enjoy tea or coffee while we demonstrate all the marvellous features of the new FT-1000.

DICK SMITH ELECTRONICS

THE ULTIMATE 2 METRE HAND-HELD TRANSCEIVER

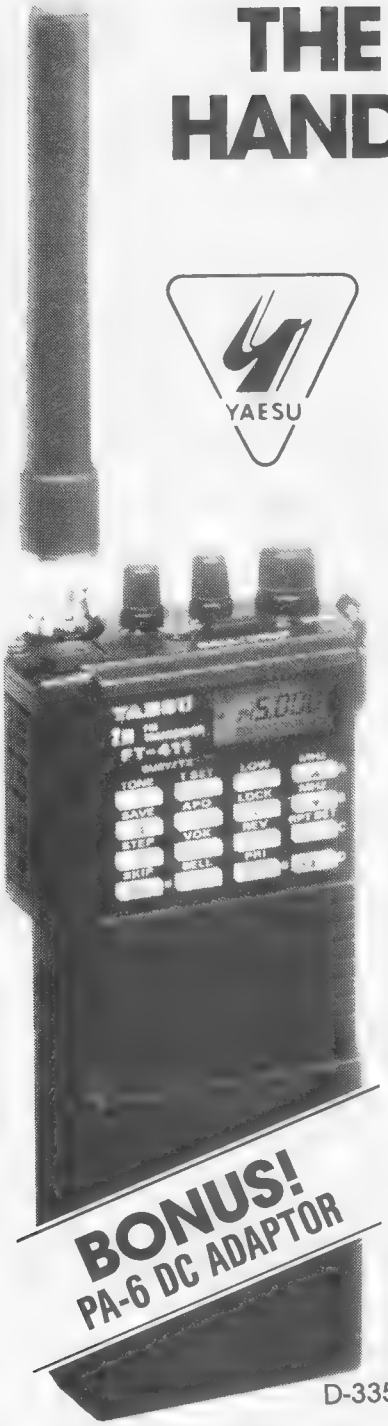

D-3350

EXCLUSIVE
2 YEAR WARRANTY

The FT-411 is a top-of-the-line ultra compact 2 metre handheld offering an incredible array of features without the size and weight of previous sets. Expanding on the microprocessor controlled features of previous models, the front panel multi-function back-lit keypad allows easy frequency entry, selection of the 49 tunable memories (which store repeater shifts, or separate Tx/Rx frequencies), setting of the programmable-interval 'power-saver' system, as well as a host of other convenience features. CPU control also offers 2 VFO's, rotary dial tuning with 5 selectable tuning steps, a multi-function back-lit 6 digit LCD screen with bargraph Signal/P.O. meter, and a range of scanning options. Even VOX (voice-activated transmit) circuitry is provided, allowing hands-free operation with the optional YH-2 headset.

Yaesu have also recognised that a hand-held radio must be ruggedly constructed, and yet be small enough and light enough to carry around all day. Through the extensive use of surface-mounted components, a heavy duty die-cast rear panel, rubber gasket seals around all external controls and connectors, and a carry case supplied as standard, the FT-411 will provide reliable operation even in dusty or humid environments while measuring only 55 (W) x 155 (H) x 32mm (D), and weighting less than 550 grams (including a high capacity 1000mAH FNB-14 NiCd battery giving 2.5W output). A range of inexpensive optional accessories are also available to provide flexibility for users differing requirements. See ARA review Vol 12 Issue 3, and AR review January 1990 issue.

Complete Package:

FT-411, FNB-14 7.2V NiCad, Carry Case, Antenna, Belt Clip. Approved AC Charger, **BONUS** PA-6 DC Adaptor. (Provides 5 watts output with 12V DC, while charging the FNB- 14)

SAVE $39.95

$449

Optional Accessories

FNB-11	12V 600mAH NiCd Battery (5W out)	D-3496	$99.00
MH-12A2B	Speaker/Microphone	D-2115	$49.95
YH-2	Mic/Earphone Headset	D-2200	$49.95

YAESU STOCKS NOT HELD AT ALL STORES. PLEASE CONTACT YOUR LOCAL STORE FOR STOCK AVAILABILITY, OR ORDER BY PHONE...

DICK SMITH ELECTRONICS

• **NSW** • Albury 21 8399 • Bankstown Square 707 4888 • Belconnen (06) 253 1785 • Blacktown 671 7722 • Brookvale 905 0441 • Bondi 387 1444 • Campbelltown 27 2199 • Chatswood Chase 411 1955 • Chullora 642 8922 • Gore Hill 439 5311 • Gosford 25 0235 • Hornsby 477 6633 • Hurstville 580 8622 • Kotara 56 2092 • Liverpool 600 9888 • Maitland 33 7866 • Miranda 525 2722 • Newcastle 61 1896 • North Ryde 878 3855 • Parramatta 689 2188 • Penrith 32 3400 • Railway Square 211 3777 • Sydney City 267 9111 • Tamworth 66 1711 • Wollongong 28 3800 • **ACT** • Fyshwick 80 4944 • **VIC** • Ballarat 31 5433 • Belmont 43 8522 • Bendigo 43 0388 • Box Hill 890 0699 • Coburg 383 4455 • Dandenong 794 9377 • East Brighton 592 2366 • Essendon 379 7444 • Footscray 689 2055 • Frankston 783 9144 • Geelong 232 711 • Melbourne City 399 Elizabeth St 326 6088 and 246 Bourke St 639 0396 • Richmond 428 1614 • Ringwood 879 5338 • Springvale 547 0522 • **QLD** • Brisbane City 229 9377 •Buranda 391 6233 • Cairns 311 515 • Chermside 359 6255 • Redbank 288 5599 • Rockhampton 27 9644 • Southport 32 9033 • Toowoomba 38 4300 • Townsville 72 5722 • Underwood 341 0844 • **SA** • Adelaide City 223 4122 • Beverley 347 1900 • Elizabeth 255 6099 • Enfield 260 6088 • St. Marys 277 8977 • **WA** • Cannington 451 8666 • Fremantle 335 9733 • Perth City 481 3261 • Midland 250 1460 • Northbridge 328 6944 • **TAS** • Hobart 31 0800 • **NT** • Stuart Park 81 1977

ORDER BY PHONE OUTSIDE SYDNEY (008) 226610 Free Call Sydney Area 888 2105

The Sunshine State Jack Files Memorial Contest 1990

All licensed amateur radio operators are invited to participate in the **Sunshine State Jack Files Memorial Contest for 1990.**

Objects

1. The objects of the contest are to:

a) perpetuate the memory of the late Jack Files, who was a long-time member of the council of the Queensland Division of the Wireless Institute of Australia;

b) enable amateur radio operators to work Queensland stations for the "Worked all Queensland Award" and other awards issued by amateur radio clubs in Queensland;

c) encourage mobile/portable operation from the lesser populated towns and shires of Queensland;

d) provide a 'warm up run' for the Remembrance Day Contest.

Period

2. The contest will be run in one time period, on Saturday 14th July 1990, from 1500 hours EST (0500 hours UTC) to 2100 hours EST (1100 hours UTC).

Sections

3. Stations within VK4:

a) Tx all band. 20% of contacts claimed must have been made on the V/UHF bands;

b) Tx HF phone;

c) Tx HF CW;

d) Tx V/UHF only;

e) Club stations in a to d above, single transmitter.

4. Stations outside VK4:

a) Tx all band phone;

b) Tx all band CW.

Preferred contest frequencies

Phone	CW
1.820-1.840 MHz	1.805-1.815 MHz
3.570-3.590 MHz	3.525-3.535 MHz
7.100-7.120 MHz	7.010-7.020 MHz
14.180-14.200 MHz	14.050-14.060 MHz
21.170-21.195 MHz	21.125-21.150 MHz
28.480-28.520 MHz	28.125-28.150 MHz

Operation

5. The WARC bands may not be used in this contest. Cross-band operation is permitted only via a satellite repeater; contacts made via a net are not admissible; cross-mode operation is allowed.

6. The contest is primarily for single-operator stations, but log keepers are allowed. Where two licensees use a single station, each is to submit a separate log.

7. Club stations may use multiple operators, provided that there is only one transmitter in use at any one time.

8. Home-based stations may be worked again after an elapsed time of one (1) hour.

9. Mobile or portable stations are not subject to the one-hour rule when operating from a different city/town/shire. When operating within one hour from that of previous operations, they are regarded as "new" stations for their own and the contacted stations scoring purposes. (Different is not to be taken as alternating, e.g., operations from Area A for 50 minutes, then move to Area B, operate for 50 minutes and return to Area A, would be regarded as alternating, not different). Operations from the same city/town/shire after one hour, regardless of movement within that area, are regarded as home station operations.

Calling procedure

10. Phone: CQ Jack Files Contest
CW: CQ Test Jack Files

Exchanges

11. Each exchange is to contain the following elements:

a) the location designator, N or S, see Scoring;

b) the serial number beginning with 001 and continuing in sequence throughout the contest and on all bands worked;

c) the "code letters" of the designated city/town/shire, as set out in the attached "designated areas and code letters".

Scoring

12. For scoring purposes, Queensland is divided into two zones by the Tropic of Capricorn. Stations in designated areas north of the Tropic are to use the letter "N" as the first element of contact exchange. Those in designated areas south of the Tropic are to use "S" similarly.

Example: A valid exchange for scoring purposes might be:

S	001	MH
Zone	Contact	City/town/shire
N	132	RH

13. Stations within VK4, phone contacts:

a) HF/V/U/HF within the same zone ...3 points

b) HF/V/U/HF with the opposite zone ...5 points

c) HF/V/U/HF outside VK4...2 points

d) All CW contacts score double points, ie, 6, 10 or 4.

14. Stations outside VK4, ALL phone contacts, 2 points, ALL CW contacts, 4 points.

Bonus points applicable to all stations

15. A bonus of ten (10) points may be claimed for the first contact with a city/town/shire, other than the one from which the claimant is operating, over the whole contest.

16. A further bonus of ten (10) points may be claimed for each club station on each occasion it is worked (one-hour rule still applies).

Examples: Phone: A VK4 station in S zone, first contact with VK4OOO in Cairns, which is the club station of the Green Isld ARC Inc, scores 5 points for across zone, 10 points for first contact Cairns City, 10 points for club station, total 25 points.

CW: For the same contact, score 10, 10, 10, total 30 points.

Stations outside VK4 would score 2, 10, 10, or 4, 10, 10, for phone or CW respectively.

NB: No further bonus may be claimed for Cairns City.

Logs

17. Logs must show the full name, address and callsign of the operator(s), the section entered, points claimed for each contact and the total points claimed, a signed and dated statement that the rules have been followed, and the appropriate licence conditions observed. A recommended form of log is:

Date Time	Band	Mode	Call	No Sent	No Rec'd	Points QSO	Club C/T/S/	Total
15 7 89								
0834	7.0MHz	Phone	VK4OOO	S001BE	N00CS	5	10 10	25
0837	7.0MHz	Phone	VK4SSS	S002BE	S001BE	3		3

(Assumes VK4SSS is not a club station)

18. Logs are to arrive at:
VK4 Contest Manager
T Mulholland VK4AEM
PO Box 35
Caloundra City Q 4551
ON or BEFORE 10th August, 1990.

Awards

19. Trophies will be awarded by the WIA (Q) Awards Manager to the highest scorer in each section, provided that there is a minimum of five entries in that section.

Code to define cities, towns and shires for the Jack Files contest

Cities/Towns

Brisbane	BN	Ipswich	IP
Bundaberg	BU	Logan City	LC
Cairns	CS	Mackay	MC
Caloundra	CA	Maryborough	MB
Charters Towers	CT	Mount Isa	MI
Dalby	DY	Redcliff	RC
Gladstone	GD	Rockhampton	RH
Gold Coast	GC	Roma	RM
Goondiwindi	GI	Toowoomba	TO
Gympie	GY	Townsville	TV
Hervey Bay	HB	Thuringowa	TH
		Warwick	WA

Shires

Albert	AL	Jericho	JE
Allora	AA	Johnstone	JO
Aramac	AC	Jondaryan	JY
Arakun*	AN	Kilcoy	KY
Atherton	AT	Kilkivan	KK
Burdekin	BK	Kingaroy	KG
Balonne	BL	Kolan	KO
Banana	BA	Laidley	LA
Barcaldine	BC	Livingston	LV
Barcoo	BO	Longreach	LO
Bauhinnia	BH	McKinlay	MK
Beaudesert	BT	Mareeba	MA
Belyando	BY	Maroochy	MO
Benedmere	BD	Milmeran	ML
Biggenden	BG	Mirani	MN
Blackall	BX	Miriam Vale	MV
Boonah	BV	Monto	MT
Booringah	BQ	Moreton	MR
Boulia	BZ	Mornington*	MZ
Bowen	BW	Mount Morgan	MM
Broadsound	BS	Mulgrave	MG
Bulloo	BP	Mundubbera	MU
Bungil	BI	Murgon	MY
Burke	BR	Murella	MX
Caboolture	CB	Murweh	MH
Calliope	CL	Nanango	NN
Cambooya	CM	Nebo	NE
Cardwell	CD	Noosa	NO
Carpentaria	CP	Paroo	PO
Chinchilla	CH	Peak Downs	PD
Clifton	CF	Perry	PY
Cloncurry	CY	Pine Rivers	PR
Cook	CK	Pioneer	PI
Crows Nest	CN	Pittsworth	PT
Croydon	CR	Proserpine	PP
Dalrymple	DL	Quilpie	QL
Diamantina	DI	Redland	RD
Douglas	DG	Richmond	RI
Duaringa	DU	Rosalie	RO
Eacham	EA	Rosenthal	RL
Eidsvold	ED	Sarina	SA
Emerald	EM	Stanthorpe	ST
Esk	EK	Tambo	TB
Etheridge	ET	Tara	TA
Fitzroy	FZ	Taroom	TM
Flinders	FL	Tiaro	TI
Gatton	GT	Torres	TE
Gayndah	GH	Waggamba	WG
Glengallan	GL	Wambo	WO
Gooboorum	GM	Warroo	WR
Herberton	HT	Widgee	WE
Hinchinbrook	HK	Winton	WI
Ilfracombe	IL	Wondai	WD
Inglewood	IW	Woocoo	WC
Isis	IS	Woongarra	WN
Isisford	IF		

*Permission to operate in these shires is required.

SEANET World Wide DX Contest 1990

Contest Dates & Times

CW contest: 0001z Saturday 21 July '90 to 2359z Sunday 22 July '90

Fone contest: 0001z Saturday 18 Aug '90 to 2359z Sunday 19 Aug '90

Bands:

160, 80, 40, 20, 15, 10 metres

Entry Classification

1. Single band - single operator
2. Multi band - single operator
3. Multi band — multi operator

Power Input

As stipulated in the regulations governing the licence of the operator.

Contest Call

"CQ SEA" for CW contest
"CQ SEATEST" for FONE contest

Reporting

RS/RST report plus serial numbers starting with 001 and increasing by one for each successive contact. See also rule 3(d).

Scoring Rules

1. For stations OUTSIDE SEAnet area
(a) Contact with stations within SEAnet area of the following prefixes:DU/DV/DX, HS, YB/YC/YE, 9M2, 9M6, 9M8, 9V, V85.
20 points on 160 metres
10 points on 80 and 40 metres
4 points on 20, 15 and 10 metres
(b) Contacts with other stations within SEAnet area not listed above in 1(a):
10 points on 160 metres
5 points on 80 and 40 metres
2 points on 20, 15 and 10 metres
(c) Contacts between stations outside SEAnet area will not be counted.
(d) Multipliers will be three points for each country worked, ie for countries within SEAnet area only.

2. For stations in the SEAnet area
(a) Contacts with stations outside SEAnet area
10 points on 160 metres
5 points on 80 and 40 metres
2 points on 20, 15 and 10 metres
(b) Contacts with other stations within SEAnet area not listed above in 1(a):
10 points on 160 metres
5 points on 80 and 40 metres
2 points on 20, 15 and 10 metres
(c) Contacts between stations in own country will not be counted either for QSO points or multiplier purposes.
(d) Multipliers
Contacts with countries within SEAnet area Count 2 points for each country worked
Contacts with countries outside SEAnet area Count 3 points for each country worked
3. The final score will be the sum of the points multiplied by the sum of the country multipliers.

List of SEAnet area prefixes

A4, A5, A6, A7, A9, AP, BV, BY/BZ, DU/DV/DX, EP, HL, HS, JA/JE/JF/JG/JH/JI/JJ/JR etc, JD1, JY, KH2, P29, S79, VK1/.../VK9, VQ9, VS6, VU, V85, XU, XV/3W, XW, XX9, YB/YC/YE, ZK, ZL1/ZM1.../ZL4/ZM4, ZL6/ZM6, ZL9, 3B6/3B7, 3B8, 3B9, 4S7, 4X/4Z, 8Q7, 9K2, 9M2, 9M6, 9M8, 9N1 and 9V.

Restrictions

(a) Contacts on cross-mode or cross-bands or mixed CW-FONE logs will be disqualified.
(b) Operators are not allowed to transmit two or more signals at the same time on the same band.
(c) Only one contact per band with the same station will be counted.
(d) Contest numbers should begin with 001 on each different band.
(e) All entries in violation of the contest rules, incorrect statements in the submitted reports, taking points from duplicate contacts, and practices against the brotherhood of amateur radio will be disqualified.
(f) The decision of the SEAnet contest committee shall be final.

Entries, Log(s) and Summary Sheet(s)

All entries must be in the form of log(s). Summary sheet(s) showing claimed scored band-by-band plus total score claimed must be attached to the log(s). The summary sheet(s) must be signed by the operator(s) and include the following statement:

"I/we certify that the station has been operated within the spirit of the contest and the terms of the station licence."

Please do not forget to clearly mark your name, call and mailing QTH on the summary sheet(s) and log(s).

All times must be in UTC. Entries must be received by the Contest Manager, Yathe 9V1JY, PO Box 2728, Singapore 9047, not later than 31st October 1990. Results will be announced at the Seanet '90 Convention. If you require a results slip to be sent to you, please enclose three IRCs together with your entry. **ar**

HAVE YOU ADVISED DOTC OF YOUR NEW ADDRESS?

HOW'S DX

STEPHEN PALL VK2PS
PO BOX 93 DURAL 2158

Exciting DX in April

As I write these lines very early in May — the month of April filled with an abundance of DX, just passed.What a month it was!

Jim VK9NS has completed his successful Bhutan (A51JS) activity with approximately 15,000 QSOs. He decided not to go to Bangladesh, where Vince K5VT was active on CW as S20VT (QSL to home call). Almost at the same time, the Japanese group led by JH1AJT made a return visit and operated for two weeks on SSB under the callsign S21U. QSL to :JH1AJT: Yausuo "Zorro" Miyazawa, PO Box 8, Asahi, Yokohama 241 Japan. The Jarvis DXpedition had a successful and well-disciplined activity from the Island as AH3C/KH5J. They came up on the designated frequencies, announced their callsign and QSL information frequently and, at some stages, were actively looking for VK-ZLs. After 52,000 QSOs, the seven operators returned to their respective countries (W-OH-JA) via the Dayton, Ohio, Hamvention at the end of April. QSL for the Jarvis operation to be sent to OH2BN: Jarmo J Jaakola, Kiilletie 5C 30, 00710 Helsinki, Finland. John, PA3CXC kept his promise and activated Southern Sudan with the call: PA3XCX/ST0. QSL via the Bureau, or to: John H Fung Loy, Straussin 4, NL-2551, NMS Gravenhage, The Netherlands. At the end of the month of April came 1A0KM — The Knights of Malta. Booming signal on the longpath to VK. QSL to: I0IJ: Antonio Privitera, via Ceresia 34, I-00199, Rome, Italy. After many months of rumours, Spratly Island was activated by the Russian team. The operation was intermittent due to generator and fuel supply problems, but many DXers were able to make contact with them. The call was: 1S0XC. QSL to: Roman Stapanenko, PO Box 208, Moscow, 102009, USSR. Keep in mind the earlier published suggestions how to QSL direct with the Soviet Union. The Hungarian DXpedition could not operate from Burma, so it decided to activate XU8CW and XU8DX from Kampuchea. QSL to: Mr Jacques Pecourt, PO Box 1384, Millbrook, NY 12545, USA.

What an exciting month! Seven very rare DX countries in one month. One well known VK2 DXer wrote to me: "Working S2,ST0 and 1S in 24 hours is a bit hard to top, so I might retire, hi."

Future DX?

Whilst the propagation is still at acceptable levels, do what you can, as the bottom of the "22" sunspot cycle is not as far away as you might think. Some experts say that we have already reached the peak of the cycle. There was a major solar storm mid-April. The solar flux peaked around 250, but it is quite possible that it will drop down around 150 by mid-May.

Trindade Island DXpedition

This activity will be in full swing in June and July. The correct callsign will be announced on the first day of operation, to stop pirates using the call before.

All bands,including WARC bands will be used,both SSB and CW, with two stations operating. Sorry, no RTTY. QSLs via the Bureau, or for direct reply with SASE for the SSB operation to: PS7KM, Karl Mesquita Leite,Box 385, 59000 Natal, R N Brazil. For CW operation to: PT7AA, Pergentina I de Andrade, Rua Osorio de Paiva 25,-60000 Fortaleza, CE, Brazil. The cost of the expedition is over US$2000 and the NatalDX Group, Caixa Postal 597, 59021, Natal R N Brazil, South America, is seeking donations by registered air mail to defray costs.

South Sandwich and South Georgia Islands — VP8

This activity will start on 26th November 1990 on the South Georgia Island Group, and on 1st December at the South Sandwich Island. The planned stay on South Sandwich is seven days.Both locations will operate SSB, CW, RTTY, Satellite, UHF, VHF, HF, 10 through 160 metres. All 22 operators are experienced in DX work. QSL via the Bureau or direct to: AA6BB/7 or KA6V/7, J & J Branson, 93787 Dorset Lane, Junction City, OR, 97448, USA. The total cost of expedition is estimated around US$215,000. Here are some interesting figures which will make you think: Ship charter from the Falklands and return 20 days, including fuel and meals: $175,000. Generator and fuel: $12,000. Foul weather gear$9000. Air transportation (to Falklands) $15,000 etc, etc. Jerry Branson (above) is the treasurer of the operation, and donations are actively sought from the DXing fraternity.

Minami Torishima — JD1

Kiyo, JA9IAX, will begin a three-month stay on the island beginning 17th May. He will be very active, specially on CW. QSL to JJ1TBB.

Jan Mayen-JX

LA7DFA: Per is scheduled to be on the island from 1st April to 27th July, and will operate as JX7DFA. Look out for him on: 3501, 7005, 14010, 21010 and 28010. All those who need practice with the key, better start again. QSL to: Per Dahlen, Myrvangsvingen, 21,7026, Trondheim, Norway.

Market Reef OH0M

A number of USA and Finnish operators will be active from this tiny rocky island, located between Äland (OH0) and Sweden (SM). The maximum elevation is one metre

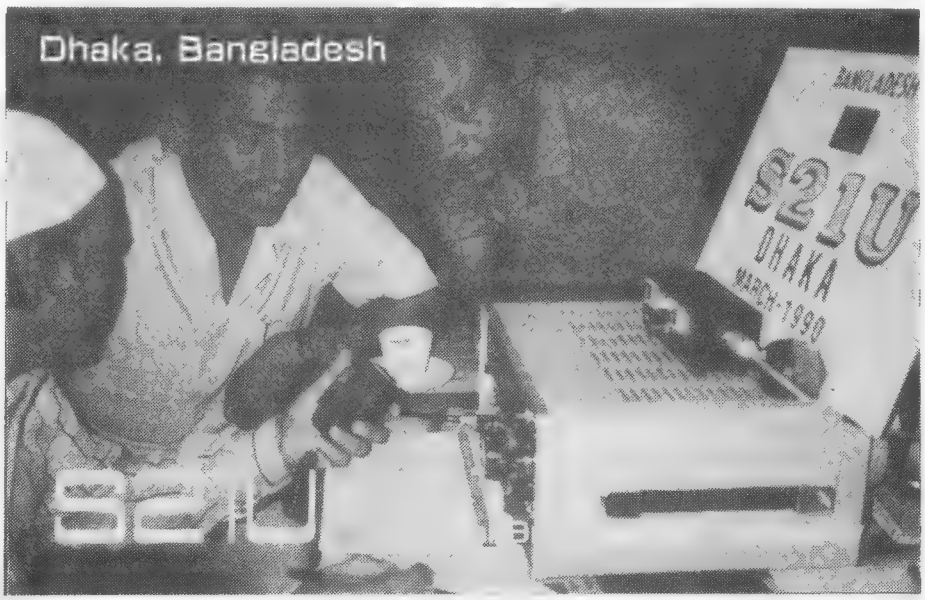

S21U was established in March 1990 in the office of the Bangladesh (Dhaka) National Broadcasting Authority with the goodwill and co-operation of Japanese operators. It was granted a licence for preliminary research into amateur radio activity in Bangladesh. Card by courtesy of JA1UT.

above sea level. The island is uninhabited, except for a few birds which rest there. The only buildings are an automated, unattended lighthouse and weather station. The activity is planned from 28th July to 4th August.

Cocos Keeling Islands — VK9

If you worked VK9EW and VK9WB between 19th and 26th May on CW and SSB you have contacted Ray W5EW and Barry WC5N who spent one week on the island. QSL for both stations to W5EW, Ray Husher, PO Box 73, Bernice, LA 71222, USA.

Oman-Kuria Muria Island — A43

The DX group of the Royal Omani Amateur Radio Society has activated this island. Many years ago, in 1967 to be exact, this was a separate country using the prefix VQ9S. The present special call was used as A43KM/0. They were active from 17th to 24th May. Both SSB and CW from 10 to 160 metres. There is some hint that the society might press for a separate country status with the DXCC. QSL via the Bureau.

Conway Reef — 3D

At the time of writing this article, it was planned that part of the Jarvis DXpedition team and well-known DXers VE7SW, SM7PKK and Ron ZL1AMO will visit Conway Reef between 16th and 23rd May. This will be the first DX operation since the reef was added to the official DX countries list.

Interesting QSOs and QSL information

Note the following abbreviations: Callsign name of operator — frequency — (kHz), mode UTC time. ADAR means = QSL info in previous AR issues.

YJ8NAC — MODREA-(YL)-28170-CW-0108. Novice, licensed three weeks, QSL to F6FNU — ADAR.

A61AD — 14200-SSB-2210-QSL to: WB2DND: Donald Greenbaum, 250 Standish St, Duxbury, MA, 02332 USA.

3D2QB — Allan-21010-CW. QSL to:SM5BQB: Alland Ostermann, Haro, S-10005, Stockholm 1 Sweden.

HK0BKX — Francisco-14014-CW-1200. QSL to: WB9NUL: Joyce Boothe, RT 6, Box 748A, Harlingen, TX, 78552 USA.

6W6JX — 14 MHz-CW-0700. QSL to: J Pipien, PO Box 200, Kaolack, Senegal, Africa.

VQ9LW — 14 MHz-CW-0400. QSL to: WA2ALY, L A Wolff, 624 East Dr, Paramus, NJ, 07652, USA.

V31BB — 14 MHz-CW-0740. QSL to: K3FEN, T Bell, 747 Sunblest Blvd, Noblesville, IN 46060, USA.

FG5XC — 14 MHz-CW-2200. QSL to: Pierre Habazac, F-97113, Gourbeyre, Guadelope.

XZ2TH — 21 MHz-CW-0130. QSL to: W6EXP, Ralph Blake, 1002 Modoc St, Susanville, CA, 96130, USA.

ZK2KY — Kiyoko-28475-SSB-0322. QSL to: PO Box 3 Tokaimura, Japan.

A92FB — Bernie-21247-SSB-1225. QSL to: B Donders, PO Box 22394, Bahrain.

V31PC — Don-21292-SSB-0645. QSL to: D Owen Lewis, Box 7 Punta Gorda, Toledo, Belize.

TA2L-Ustun-21155-SSB-0655. QSL to: Ustun Arik, Platin Sok 11 3 Box 430, Kizilay, Ankara, Turkey.

EK0DR-21015-CW at Cape Schmidt on the way to Wrangel Island. QSL via Bureau via UA0KBZ.

C21DX-21014-CW-0955. QSL to: Nauru Central Radio Club, Nauru.

CU2GE-Joseph-14188-SSB-1100. QSL via the Bureau.

JY5IN-Ibrahim-14243-SSB-0622. QSL to: Box 925677, Amman, Jordan.

8J90XPO-28018-CW-0708. QSL via Bureau.

ZF1RC-Roger-21205-SSB-0515. QSL to: PO Box 1549, Cayman Island.

JA7FTJ/JD1-14226-SSB-1308. QSL to: JA7BIJ, Hirokatsu Tsukidate, 1-3 Tainaka, Nukazuka, Hachinohe, Aomori 031 Japan.

ZV7XW-Eli-Club Station-14222-SSB-0616. QSL via Bureau. (Brazil)

H44MS-Bernhard-14222-SSB-0637-OP. DL2GAC. QSL: ADAR.

T30NAD-Bob-28480-SSB-2356. QSL via JO1CRA via Bureau.

CO8MA-Raf-21280-SSB-0336. QSL to: PO Box 144 CP, 75100, Las Tunas, Cuba.

Z24JS-George-21205-SSB-0539. QSL to W3HNK: ADAR.

ZL0AIC-Marcus with "Greenpeace"in the Antarctic-14222-SSB-0705. QSL to: HB9AAA: via the Bureau.

T77C-Tony-14145-SSB-0810. QSL to: Tony Ceccoli, via Delle Carrare 67, RSM-47031, Murata, San Marino.

FT5XA-Rafique-14226-SSB-1158. QSL to: F6ITD: Jean Pierre Berthomieux, 29 rue de Cammas,F31650, Daint Orens De Gameville, France.

RTTY News

Here are some choice DX as supplied by Syd VK2SG.

TR8JLD-14089-2245. QSL via AK1E.

ZK2RW-21087-0337. QSL via Ron, ZL1AMO.

OY9JD-21097-1825.

FM5WU-14082-2220. QSL to F6FNU-ADAR.

KP2BH-14087-1300

HV3SJ-21083-1800

S92LB-14087-0445

YV0AA-14088-0320. QSL via YV5AJ, Radio Club, Caracas, Venezuela.

SU1HN-14085-0046. QSL to:Ahmed Hassar, Box 1578, Alf Naskah, Cairo, Egypt.

PZ1BS-14090-2124. QSL to Box 83, Paramaribo, Surinam.

Nancy VK2PNG pictured with Dale Baker at the VK5 WIA Christmas party Dec 1989.

From Here and There and Everywhere

VERON, the Dutch Amateur Radio Society, advises us that the World Championships and Games for the Disabled will take place in Assen, Holland, from 14th to 26th July. A special amateur radio station will be operational with the callsigns PI4ASN and PA6WGD. A QSO with the latter station will qualify you for an award. Send your QSL card and US$5 (or equivalent) to the Award Manager, PA3FFX, PO Box 407, 9400, A K Assen, The Netherlands. All proceeds from this award will be for the development of sporting facilities for the disabled.

VK2DID reports that he had a CW contact with Carlos KP4EJ. The interesting part of the QSO was when Carlos reported that his aerial was a full wave, and it was 20 feet underground. QSL to: Box 978 Salinas, Puerto Rico. The QSL address of 3W3RR and 1S0XV is the same. Graham VK6RO claims that he is the first VK to work "100 countries" on the 18MHz band. He started on the 17th December 1982 and had reached the magical number on 12th March 1990. Zbig "Frank" VK2EKY sent a picture card to the VK2 Division from American Samoa, where he started his recent Pacific DX journey as KH8/VK2EKY. He was later heard as 5W1KY from Western Samoa. Depending on personal circumstances, he might go to ZK1, ZK3 (?) or Rotuma Island. Later on in the year, he intends to travel to Japan where he will stay six months with his Japanese wife. He intends to be active from Japan with a 7J6 prefix from Beppo. QSL for KH8/VK2EKY or 5W1KY goes via WA3HUP, ADAR. However, VKs might QSL via the VK2 Bureau.

"Dusty" ZL2VS, who operated at the beginning of the year as VM7VS, is waiting on his new QSL cards from the printer. He hopes to complete his QSLing duties soon. "Bing", VK2BCH has recovered from his illness, and intends to go back to Rotuma to reactivate his

3D2XV callsign, and then proceed to A35. Matts, SM7PKK is still in the Pacific area. He was heard from Wallis Island as FW/P/SM7PKK. Later he visited American Samoa as KH8/P/SM7PKK, then Niue Island as ZK2KK. He will be one of the operators who will go to Conway Reef middle of May. All QSLs to his homecall - ADAR. Ken, VK5QW is not the QSL Manager for UQ1GWC or YL1WC. Recently he received a number of QSL cards for these stations, as QSL manager, which he is not, and has difficulty redirecting them. There is an unconfirmed rumour that the Japanese amateurs will return to Bangladesh for 30 days activity in September. ZS8MI will be active again with ZS5AEN as the new operator. IJ5ONU was a special call for the "UNICEF" activity. QSL to I5KKW via the Bureau. EK0KBZ and EK0DR were special-event stations with the joint US/USSR sled-dog expedition in the Arctic to Wrangel Island. QSL to UA0KBZ via the Bureau, or direct to Sergey UA0KBZ, PO Box 485, Cape Schmidt, Magadan Oblast, 686830, USSR. 4K3ODX is on Novaya Zemlya Island. QSL to RA1OA. CT0B was a special-event station activating Berlenga Island in the Atlantic Ocean off the Portuguese coast. QSL via CT1CWT. Instead of helicopters, the Spratly DXpedition used boats to get to the island. It was said that a Soviet sponsor has arranged a loan of $25,000 to finance the expedition, and the loan must be repaid. GC45LD was a special callsign on Jersey Island to commemorate the 45th anniversary of the liberation of the Channel Islands.

EM/EO/ER/EU/EV/EW are special USSR prefixes to celebrate the victory of the USSR in World War II.

Interesting QSLs Received

Note: W = weeks; MO = months; FM = from; MGR = manager; OP = operator.

Direct QSLs received: 9K2KS 11W FM MGR - ST4/WZ6G 8W FM MGR - VK9LA 2W FM OP - VK9TR 4W FM OP - FM5WD 4W FM MGR - XW8KPV 15W FM MGF - 9H1EU 2W FM MGR - J88BS 3W FM MGR - XW8DX 5W FM MGR - C06CD 2W FM MGR - ZB2FX 7MO FM OP - EA6SX 3W FM OP - XX9SW 4W - ZB2AZ 3W - Z21AA 3W - Others direct: A41KJ, ZB2GR, A92EV, VR200PI/JR, OH0XX.

Bureau QSLs received: LX2KQ - EA6MQ - JW1CY - ZS5XA - LX9CFL - ZP5PX - HB0CZS - VK0JV - OH2AP/OH0M - T32JA - ZF2NV/ZF8 - 5W1YL - T22VU - VK 9NKG - GD4PTV - EA6VQ - YS1MAE - FM5CL.

Thanks To You

Encouraging notes were received from VK3CTM and VK3N/XPL. Information received from VK2DOJ, VK2DID, VK2RZ, VK2APD, VK3DD, VK4DA, VK4OH, 4K4OD, VK5WO, VK5QW, VK5NVW, VK5BAS, VK6NE and the "QRZ DX" and "The DX Bulletin". To all of you thanks for your assistance and cooperation.

Good DX and 73.

VHF/UHF AN EXPANDING WORLD

Eric Jamieson VK5LP
9 West Terrace Meningie 5264

All times are Universal Time Co-ordinated indicated as UTC

Beacons on six metres

Freq	Call sign	Location	Grid square
50.000	GB3BUX	England	IO73
50.005	H44HIR	Honiara	QI00
50.005	HL9TG	Korea	
50.005	ZS2SIX	South Africa	KF25
50.011	JA2IGY	Japan	PM84
50.015	SZ2DH	Greece	KM18
50.017	JA6YBR	Japan	PM51
50.020	GB3SIX	England	IO73
50.020	CX1CCC	Uruguay	
50.025	6Y5RC	Jamaica	FK17
50.025	OH1VR	Finland	KP12
50.028	JA7ZMA	Japan	QM07
50.029	CT0WW	Portugal	IN61
50.032	ZD8VHF	Ascension Island	II22
50.032	ZS5SIX	South Africa	KG50
50.035	ZB2VHF	Gibraltar	IM76
50.035	ZS3VHF	South Africa	JG87
50.039	FY7THF	French Guyana	GJ35
50.045	OX3VHF	Greenland	GP60
50.048	TG4BFK	Guatemala	
50.050	GB3NHQ	England	IO91
50.050	ZS6DN	South Africa	KG44
50.056	VK8VF	Darwin	PH57
50.057	TF3SIX	Iceland	HP94
50.062	PY2AA	Brazil	GG66
50.064	WD7Z	Arizona	EL59
50.065	GJ4HXJ	England	IN89
50.065	NB30/1	Rhode Island	FN41
50.066	VK6RPR	Perth	OF78
50.063	KH6HI	Hawaii	BL01
50.075	VS6SIX	Hong Kong	OL72
50.078	TI2NA	Costa Rica	EK70
50.080	KH6JJK	Hawaii	BL11
50.080	HC8SIX	Galapagos Is	EI59
50.085	9H1SIX	Malta	JM75
50.086	VP2MO	Montserrat	FK86
50.088	VE1SIX	Canada	FN65
50.090	KJ6BZ	Johnston Is	AK56
50.092	W5GTP	Louisiana USA	EM40
50.099	KP4EKG	Puerto Rico	FK68
50.100	HC2FG	Ecuador	FI07
50.100	5H1HK	Tanzania	
50.110	KG6DX	Guam	QK23
50.110	A61XL	United Arab Emir	LL74
50.120	4S7EA	Sri Lanka	MJ97
50.321	ZS5SIX	South Africa	KG50
50.490	JG1ZGW	Tokyo	PM95
50.499	5B4CY	Cyprus	KM54
52.100	ZK2SIX	Niue	AH50
52.200	VK8VF	Darwin	PH57
52.310	ZL3MHF	Christchurch	RE66
52.320	VK6RTT	Wickham	OG89
52.325	VK2RHV	Newcastle	QF57
52.330	VK3RGG	Geelong	QF21
52.345	VK4ABP	Longreach	QG26
52.370	VK7RST	Hobart	QE37
52.420	VK2RSY	Sydney	QF56
52.425	VK2RGB	Gunnedah	QF59
52.435	VK3RMV	Hamilton	QF12
52.440	VK4RTL	Townsville	QH30
52.445	VK4RIK	Cairns	QH23
52.450	VK5VF	Mount Lofty	PF95
52.460	VK6RPH	Perth	OF78
52.465	VK6RTW	Albany	OF84
52.470	VK7RNT	Launceston	QE38
52.485	VK8RAS	Alice Springs	PG66
52.510	ZL2MHF	Mount Climie	RE78

Six Metres

From a VK5 standpoint, six metres has been poor this autumn — the expected large influx of stations from exotic countries did not materialise, although there were a few good contacts; these included VK9LG from Lord Howe Island, W6JKV/FW Wallis Island, 5W1JP, V31PC Belize, T20AA, KG6DX, 3D2ER, 3D2CM and V73AQ Marshall Islands. Strong signals were rare and the CW signals from some other stations were too weak to work.

Roger VK5NY was observed working VK9LG on 8/4 and 10/4 around 0430 each time. On 11/4 there was an afternoon aurora which produced some raspy sounding contacts with VK3LK and VK7ZJA. The following morning UTC there were backscatter and Es signals from VK2QF, VK4BRG, VK4FNQ, peaking to 5x9 at times. At 2259 on 11/4 Roger worked XE1GRR at 4x4, 2306 3D2PO. Hugh VK5BC was amongst the DX and was heard working 3D2PO and W6JKV/FW and others. On 12/4 at 1130 Steve VK3OT was very strong on CW with my antenna at 335 degrees!

13/4 started at 0045 with VK9LG working JAs, at 0130 Joel was 5x3 rising to 5x9 on CW at 0145. At 0158 VK9LG was 5x9 on SSB and even stronger at 0205, dropping to a 5x3 CW signal at 0300. Short skip from VK3XRS who was 5x9 at 0247. At 0140 VK4DDG was heard working K6QXY. At 0426 VK2ZRZ was 5x9 and VK9LG again at 0430. There were plenty of JAs from most districts.

On 14/4 at 2310 T20AA was S2 then to KG6DX at S6 working VK2, 3, 4 and 5. On 15/4 at 2214 the usual backscatter signal from VK2QF and at 2245 VK8ZLX on backscatter.At 2300 Hugh VK5BC was observed making various contacts. On 16/4 at 0025 VK4ZAZ 5x7 while at 0820 VK5DK in Mount Gambier worked KH6IAA and NI6E/KH6 at 5x7. On 17/4 at 2323 T20AA was S1 on CW. Following the above activity the band was relatively quiet apart for JAs until this was written on 20/4.

Queensland

Although no remarkable signals in VK5, along the eastern seaboard between Sydney and Cairns, operators were being treated to some good DX, particularly those around Brisbane. John VK4ZJB reports a selection of contacts as follows: 2/4: 2205 5W1JP 5x9; 2216 W6JKV/FW 5x9. 3/4: 2132 HH7PV (Haiti) 5x1; also TI2HL, V31PC, ZK1EG, KG6DX. 5/4: 0645 JG6CVO/JD1 Ogasawari Island DXped, signals to 5x9; 8/4: 0200 YC0UVO 5x2; V73AQ. 12/4: 8P6JW Barbados, FM5WD Martinique, YV4AB Venezuela. 13/4: VK9LG, 1115 YC0UVO Indonesia, also TI5LI, ZK2KK, Niue, 5W1KT. 14/4: JJ1AEB/KH0 Marianas, AH3C/KH5 Palmyra Island. During the period several contacts were made to T20AA Tuvalu. Those making contacts from the Brisbane area included VK4s DDG, ZJB, ZNC, ZAL, ZAA, ZAZ, APG and others.

Victoria

Gil VK3AUI reports six metres DX somewhat poor this year. On 19/3 worked JA8s; 22/3 JA2s; 24/3 KG6DX and JAs. At 2348 worked ZF1RC with some difficulty due to QRM, then shortly after at 0001 25/3 Gil called CQ higher up the band to be answered by ZF1RC! He later worked JA8s. 29/3: 2307 T20AA and heard ZL3TY. On 30/3 at 0930 worked VK7JG via aurora. On 2/4 at 2250 he worked T20AA and at 0001 JI2UNR. Thanks for writing Gil, I have recorded your amended DX Standings list.

New Zealand

Kerry ZL3TPY writes with some news of his recent DXpedition at Owenga, South East Chatham Islands in AE15 grid square. He commenced operating on 19/3 with no DX! 20/3: 2016 V31PC. 21/3: 2312 heard H44HIR beacon. By this time Kerry must have been thinking had it been worth the effort, but everything changed on 22/3 when between 2052 and 2157 he worked N6XQ, K6SJI, K6HHJ, K6GMV, K6ODV, WA6BYA, K6JZK then VK2JSR on backscatter. 23/3: 1938 to 2112 — N4EJW, W400, K5LZO, K5AAD, V31PC, KP4EIT, HH7PV, K5ZMS mobile, W6UXN QRP with two Watts and others for a total of 47 contacts in W4, 5, 6 and 7. 24/3: 0345 JA8s, 2215 VK4BRG and heard P29PL. 25/3: 0206 to 0326 JA3, 8, 0 for 25 contacts, 1849 ZL1AKW F2 backscatter and at 1952 seven W5s, W7VXW and WA6BYA.

26/3: 0205 to 0751 JA1, 2, 3, 5, 6, 7, 8, 9, 0 for 137 total. Kerry remarked it was strange not to hear any JA4s. 0859 to 0936 13 VK2s and from 1929 to 2010 N5KW, W5FF, HI82, KP4ECR, WA4LOX, HH7PV and at 2318 the ZL3MHF beacon on 52.300. 27/3: 2104 to 2256 W5, 6, 7. 28/3: 2341 K6QXY. 29/3: 0056 VK4BRG, 2010 WA4LOX and K4QXX. 30/3: 2026 to 2345 W5 and W7.

Total QSOs were 270, which Kerry found disappointing. He also heard N6AMG/KH7, VK9LE, VK5s on backscatter, ZL TV on tropo for two days plus Ch 0 TV and many W6 and W7 beacons. Equipment used was an IC-575H and five-element home brew NBS Yagi up seven metres giving a clear take-off in all directions. Power was from a Honda EX350 generator plus battery.

Western Australia

In a brief report,Graham VK6RO advises that on 10/4 he just missed out on a two-way CW contact with JG6CVO/JD1,but was more fortunate on 16/4 when, at 0019, he worked AH3C/KH5J (Jarvis Island) at 5x9 and at 0121 VK9LG at 519. He did not report contacts to any other areas, so VK6 may be having a lean time, too.

The Higher Bands

Although no interstate reports are to hand, regular contacts have been occurring most evenings from around 1030 on 144, 432 and 1296 MHz between VK5KK, VK5AKM and VK5LP. The 160km path has been very reliable on all three bands even when using around three Watts.

The usual 5x9 path between VK5LP and Chris VK5MC at Hatherleigh has been used, also a contact with Colin VK5DK brought forth the information that he had moved from Yahl, a short distance from Mount Gambier, into the town itself, where he is gradually establishing his station again.

DX Standings

For those people who are working stations the second time around in order to qualify, please note that I do not need a further QSL if you obtained one previously. QSL cards are not obtained without considerable cost — all I need is for an operator to indicate the usual paramaters (call, date, time etc) and, upon comparison with your former list, the new contact will take the place of the former contact.

Closure

Unfortunately, I need to enter hospital again on 23/4 for further treatment in an effort to keep me walking, hence the short date span of these notes. Sorry about that! Closing with two thoughts for the month: "A lot of drugs are used by people who think that if you tinker with an empty head you can get it going." And: "Things turn out best for people who make the best of the way things turn out." 73 from The Voice by the Lake.

Late Items

Hugh VK5BC said April was a relatively quiet month but by persevering he was able to work as follows:

3/4: 5W1JP, W6JKV/FW, T20AA, V31PC, XE1GRR, JA and heard Ws. 4/4: JAs. 6/4: 3D2PO. 8/4: KG6DX, VK9LG. 10/4: Via aurora VK3LK, VK7ZBA, VK5NY, VK3AMZ, VK7MC, VK5RO. 11/4:JAs. 12/4: XE1GRR, W6JKV/FW, 3D2PO. 13/4: VK9LG.

16/4: T20AA, V73AQ, ZL3TY, 3D2ER, AH3C/KH5J, VK9LG, KH6IAA, NI6E/KH6, KH6SB, JAs. 17/4: T20AA. 24/4: ZK2KK, VK8GB, VK8HA, 3D2CM, XE1GRR. 26/4: 3D2PO, T32B. 27/4: V31PC, ZL7TZ. 28/4: 3DZPO. 30/4: 5W1KT, JAs. 1/5: 3D2PO, V31PC, FO5DR, F4NK. 3/5: JAs.

Most stations were worked during the morning local time and with a mixture of CW and SSB.

John VK4ZJB reports that on 24/4 between 0005 and 0045 CEODFL (Marco) on Easter Island was worked by VK4s, ZAA, ZJB, ZNC, APG, BRG and others. On 26/4 T32B was worked in Brisbane at 2301. Later FO4NK.

VK3s were reported working W9XE plus PJ, FO and YU.

Graham VK6RO reports he heard T32B (Christmas Is Pacific) on 28/4 at 0013 at 519; on 29/4 he worked ZS6XL (South Africa) at 0705 with signals 529. Also he heard V51E from Namibia at 0717. V51E was running his keyer at the time while attending church and returned after the opening.

DE **VK5LP**

ANTENNAS & ACCESSORIES

We manufacture a comprehensive range of HF, VHF and UHF antennas, baluns, power dividers etc to suit your application.
Three of our log periodics provide continuous coverage from 13-30 MHz including WARC frequencies, and replace outdated tri-banders.
Now in use in 24 overseas countries and 6 continents.

- CREATE ROTATORS, COAX CABLES & NON-CONDUCTING GUY HALYARD MATERIALS
- COMPLETE RANGE MIRAGE (USA) 5-YR WARRANTY 6M, 2M, 70CM AMPS & WATT SWR METERS
- HARD-DRAWN ANTENNA WIRE
- AUST/NZ DISTRIBUTOR FOR CREATE ANTENNAS/ROTATORS & PHYLSTRAN (KEVLAR) NON-CONDUCTING GUYING MATERIALS
- HIGH GAIN VHF & UHF AMATEUR, SCANNING & TV ANTENNAS
- BUTT SECTION TRIANGULAR ALUMIN IUM TOWERS FOR FIXED OR TILT-OVER APPLICATIONS (REFER MARCH/APRIL 1987 AR)
- SELECTION OF POWER CHIPS AT FRIENDLY PRICES
- VSWR/PWR METERS TO 1300MHz

Write or phone for free catalogue

ATN ANTENNAS

56 Campbell Street
Birchip Vic 3483
Phone: (054) 92 2224
Fax: (054) 92 2666

POUNDING BRASS

GILBERT GRIFFITH VK3CQ
7 CHURCH ST BRIGHT 3741

Learning Morse Code . .. are we flogging a dead horse?

No! How could a Morsiac like me advocate dropping the code tests for HF? But I bet you thought that's what I meant, and I have given the subject a lot of thought over the past couple of years.

What I really am getting at is the diversity of methods of learning the code, and the way that everyone reckons "their" way is the best, or even that we must simply give it a try — which is a bit difficult when one already knows the code.

You probably already know of computer programs you can learn from; you may know someone who is "into" the psychology of learning Morse code; maybe you believe that one has to receive before one sends, or like to keep a balance.Which characters should be learned first, and what about the punctuation and figures?

Everybody seems to have their own pet theory and, probably, they are all *right!*

In all the writings and stories sent to me over the past few years, I am most impressed by those who learned Morse code in the Forces and carried their training through to their amateur career. Their superiors surely must have studied the problems involved in teaching in a hurry and then applied them. Many of the letters I receive are from just those teachers and students themselves, and funnily enough they never complain about difficulty, and simply remark that they passed their 18wpm test after three weeks' training, or whatever. I am usually surprised at the short time taken!

My own preference is to use a cassette and the broadcasts, mainly because that's the way I learned. But I *did* want to learn, and I spent many hours a week (something like 30) for a number of weeks diligently writing characters, and sending pages of text to myself. Whatever the system, the *only* ingredient that is common to *all* systems is effort.

We have, in most cases,been forced to make the effort, in order to achieve our goal of a ham ticket (see note).And, do you think you or anyone else will make that effort if it is no longer required?

So, what are we to do? Do we let the lazy ones dictate the abolition of Morse code? Or should we stop moaning about their efforts and each of us make our own individual efforts to keep it. Let us emphasise the good things about achieving code proficiency, and continue to introduce as many newcomers as possible. Compared with learning the theory of radio and the regulations, the code is simple. At least it looks that way to me and, once learned, it is harder to forget than either the theory or the regulations.

Try keeping a few copies of Morse teaching tapes handy in case you get an enquiry, then give a copy to anyone else who is interested.It works!

Short Record

A nondescript nonentity, a limb of the Oppressed,
I wear no badges on my arm, no medals on my chest;
But though my past is colourless, my future dim and bleak,
I cherish a distinction which is probably unique.

Of all the mass of traffic through the tortured ether hurled,
By all the busy tells of all the navies of the world,
No Morse of mine impinged upon a fellow-speaker's ear,
I never sent a signal in the whole of my career.

I used to wonder meekly when "Control" would let me in,
To add my little quota to the universal din;
Then realised my destiny, surrendered to my fate,
Eternally to sit and serve by being told to wait.

But once, and only once, I found my baser self constrained,
To break the wireless silence I so rigidly maintained;
My weary watch was over, my relief was overdue,
I gently, briefly pressed the key to see what it would do.

I often sit and wonder where that blameless dot has gone,
If still through endless time and space it hurries bravely on;
Disowned by its creator and dismissed the parentship,
Unauthorised, attenuated, lonely little pip.

But though beyond our universe its travels may extend,
It still will bear my fingerprints on reaching journey's end;
And beings in some unknown world may trace it back to me,
As surely as the flagship did in 1933.
by "unknown"?

Note for this month: Everyone knows what a ham is. Why do many Australians dislike the name "ham"?

AMSAT AUSTRALIA

MAURIE HOOPER VK5EA
11 RICHLAND ROAD NEWTON SA 5074

National Co-ordinator
Graham Ratcliff VK5AGR

Information Nets
AMSAT Australia

Control:	VK5AGR
Amateur check in:	0945 UTC Sunday
Bulletin commences:	1000 UTC
Primary frequency:	3.685 MHz
Secondary frequency:	7.064 MHz

AMSAT SW Pacific
2200 UTC Saturday, 14.282 MHz

Participating stations and listeners are able to obtain basic orbital data including Keplerian elements from the AMSAT Australia net.This information is also included on some WIA Divisional broadcasts.

AMSAT Australia newsletter and computer software

The excellent AMSAT Australia newsletter is published monthly by Graham VK5AGR on behalf of AMSAT Australia and now has over 270 subscribers.

Should you also wish to subscribe, send a cheque for $20, payable to AMSAT Australia, addressed as follows: AMSAT Australia, GPO Box 2141, Adelaide 5001.

The newsletter provides the latest news items on all satellite activities and is a "must" for all those seriously interested in amateur satellites. Graham also provides a software service in respect to general satellite programs made available to him from various sources. To make use of this service, send Graham a blank formatted disk and a nominal donation of $10 per item to AMSAT Australia, together with sufficient funds to cover return postage. To obtain details of the programs available and other AMSAT Australia services, send a SASE to Graham.

Dove status report

(AMSAT news service bulletin 118.01 from AMSAT HQ, April 28, 1990)

On the AMSAT-NA Operations Net of 22 April 1990, Microsat command engineer Bob

McGwier, N4HY gave a brief rundown on the current status of the BRAMSAT Project DOVE satellite. After a DOVE CPU crash in March, the primary transmitter (on 145.825 mHz) was locked on in a condition where no data was being transmitted.Routine commanding of the spacecraft was impossible. Eventually, with the help of the moonbounce array at W5UN and fortuitous circumstances, the CPU was reset and control was regained.On the following day, the two-metre transmitter was turned off and the experimental S-band transmitter was activated as the only downlink during an interim recovery period.

A decision was made not to resume any DOVE operation on two metres until a new software load could be accomplished. This meant that return packets from the Microsat Boot Loader (running in on-board ROM) would have to be recovered from the S-band transmissions. DOVE's owner, BRAMSAT President Dr Junior DeCastro, PY2BJO, provided N4HY with an S-band receive converter and antenna system to be used in the recovery effort. When this equipment was installed at N4HY, Bob was able to verify what other S-band receiving stations around the world (including ON6UG, KORZ and KF4AU) had already discovered, that the phase shift keying modulation index on the transmitter was much lower than expected. Simply put, the binary data does not shift the S-band carrier a full plus and minus 180 degrees as it had been designed to. Listening on a sideband receiver, the signal sounds like mostly carrier with data only at a low volume. Additionally, data being sent via this transmitter is from the MBL which transmits incomplete telemetry packets, and those only infrequently. Command stations have experience with this data format, but it cannot be decoded directly by regular TNCs so it is difficult for other operators to participate in data collection through they may have S-band gear.

Since the reset, it has been determined that DOVE is in a safe and stable condition running the MBL firmware. N4HY has developed a DSP-based technique to decode with some certainty the undermodulated packets returned on DOVE S band during software uploads. He expects to be able to load and verify a new operating system on DOVE with some difficulty and then resume two-metre transmissions. A full recovery is expected.

During the time required to get the S-band receive gear and demodulation techniques developed, work has been proceeding on the first, rudimentary PBBS systems for LUSAT and PACSAT. After these systems are installed and in use, full attention will be concentrated on the DOVE recovery.

AMSAT-NA and BRAMSAT recognize the popularity of DOVE and regret the inconvenience that these startup delays have caused to educators and other amateurs worldwide who are anxious to see DOVE begin its operational mission. It is, of course, imperative that all

NASA 2-line Keplerian Elements

```
AO-10
1 14129U 83 58  B 90 84.27862046 -.00000064  00000-0  0000000 0  4622
2 14129  25.9479 212.4769 5985025 129.1636 301.2066  2.05882684 50981
UO-11
1 14781U 84 21  B 90 99.59599845  .00001872  00000-0  35652-3 0  6525
2 14781  97.9554 154.3796 0013847 103.2959 256.9785 14.65141902325925
MIR
1 16609U 86 17  A 90 99.55795904  .00027804  00000-0  31768-3 0  5237
2 16609  51.6177 316.2517 0012925  12.3047 347.8333 15.61861985237386
RS-10/11
1 18129U 87 54  A 90 99.91159827  .00000115  00000-0  11540-3 0   941
2 18129  82.9305  18.9669 0010881 315.0282  45.0035 13.72076337140087
AO-13
1 19216U 88 51  B 90 98.16789877 -.00000112  00000-0  99999-4 0   849
2 19216  57.0155 160.8093 6926959 224.6613  52.5253  2.09702913 13909
UO-14
1 20437U 90  5  B 90 98.69799047  .00000333  00000-0  14884-3 0   478
2 20437  98.6991 175.0011 0011957   1.9596 358.1640 14.28547955 10949
UO-15
1 20438U 90  5  C 90 94.22658296  .00000672  00000-0  28542-3 0   386
2 20438  98.7043 170.5385 0010972  16.8573 343.2924 14.28317844 10301
AO-16
1 20439U 90  5  D 90 97.71241468  .00000788  00000-0  32935-3 0   382
2 20439  98.7109 174.0751 0012372   4.5554 355.5683 14.28654650 10802
DO-17
1 20440U 90  5  E 90 97.71059459  .00000838  00000-0  34893-3 0   315
2 20440  98.7110 174.0777 0012473   4.5127 355.6104 14.28693461 10804
WO-18
1 20441U 90  5  F 90 99.24533202  .00000467  00000-0  20139-3 0   281
2 20441  98.7042 175.6130 0012728   1.5364 358.5853 14.28798124 11022
LO-19
1 20442U 90  5  G 90 98.12125844  .00000777  00000-0  32352-3 0   348
2 20442  98.7064 174.4989 0013204   3.7794 356.3462 14.28868160 10868
FO-20
1 20480U 90 13  C 90100.01933386  .00000074  00000-0  21628-3 0   219
2 20480  99.0470 159.3790 0540761 202.8727 154.7429 12.83125060  8008
```

OSCAR-13 SCHEDULE Station: Adelaide Hour - UTC

```
-------0  1  2  3  4  5  6  7  8  9 10 11 12 13 14 15 16 17 18 19 20 21 22 23
01Jun90-------------------------------------bbbbbB--------------------------bbb---
02Jun90-----------------------------------bbbbbBBBB-----------------------bb-------
03Jun90-------------------------------bbbbbBBBBBBB-------------------bbb----------
04Jun90-----------------------------bbbbbBBBBBBBLL-----------------bb-----------
05Jun90-----------------------bbbbbBBBBBBBLLLL----------------b------------------
06Jun90-----------------bbbbbbBBBBBBBLLLLBB-----------------------------------
07Jun90-------------bbbbbbBBBBBBBLLLLSBBB-----------------------------------
08Jun90-----------bbbbbbBBBBBBBLLLLSBBB-----------------------------------------
09Jun90------bbbbbbbBBBBBBBLLLLBB-------------------------------------------b
10Jun90---bbbb--------------------------------------------------------------bb--
11Jun90bb-------------------------------------------------------------------bb-------
12Jun90-------------------------------------bbbbbB--------------------------bb--------
13Jun90-----------------------------bbbbbbBBBB-----------------------bb----------
14Jun90-----------------------------bbbbbBBBBBBB-----------------bb-----------
15Jun90-----------------------bbbbbbBBBBBBBLL-----------------bb------------------
16Jun90-----------------bbbbbbBBBBBBBLLLL----------------b------------------
17Jun90---------------bbbbbBBBBBBBLLLLSB-----------------------------------
18Jun90------------bbbbbbBBBBBBBLLLLSBB-----------------------------------
19Jun90--------bbbbbbBBBBBBBLLLLBBB-----------------------------------------
20Jun90----bbbbbbBBBBBBBLLLLSBB-------------------------------------------bbb
21Jun90-bbbb----------------------------------------------------------bb-----
22Jun90-----------------------------------bbbbb-----------------------bb--------
23Jun90-------------------------------bbbbbBBBB-----------------------bbb----------
24Jun90-----------------------------bbbbbBBBBBB-----------------bb----------
25Jun90-----------------------bbbbbBBBBBBBLL-----------------bb-----------
26Jun90-----------------bbbbbbBBBBBBBLL-----------------bb-----------
27Jun90----------------bbbbbBBBBBBBLLLL----------------bb-----------
28Jun90------------bbbbbbBBBBBBBLLLLSB-----------------------------------
29Jun90---------bbbbbbBBBBBBBLLLLBBB-----------------------------------------
30Jun90-----bbbbbbBBBBBBBLLLLSBBB-----------------------------------------bb
01Jul90--bbbbbbBBBBBBBLLLLSB-----------------------------------------------bbb--
02Jul90bbb------------------------------------------------------------bbb------
03Jul90-----------------------------------------------------------------------
```

Schedule until 5 July 1990:					
Mode-B	:	MA 000 to 100	Mode-S	:	MA 130 to 135
Mode-JL	:	MA 100 to 125	Mode-BS	:	MA 135 to 140
Mode-LS	:	MA 125 to 130	Mode-B	:	MA 140 to 256
			Omnis	:	MA 220 to 040

facets of spacecraft checkout and operation, including this first crash recovery, be done thoroughly and with the utmost care.

Project Oscar meeting report

(AMSAT news service bulletin 118.02 from AMSAT HQ, April 28, 1990)

Future plans made during project OSCAR meeting

Project OSCAR's Executive Committee met on April 22 and has set forth on a number of new projects. Among the items covered was renewed interest to again produce the Project OSCAR Orbital Prediction Calendar Book.The purpose of the orbital prediction book is to provide simple and inexpensive tracking information to anyone interested in the low-orbiting satellites such as Microsat, UoSAT, Fuji and the Radio Sputnik series of amateur satellites.

It was determined that Project OSCAR members would like to participate in future satellite projects. Therefore, the Executive Committee will be submitting thoughts to the group meeting in Marburg, West Germany in May, discussing ideas on a Phase IIID satellite. Project OSCAR will look to develop a Mode S receive system from available (and cost effective) modules now on the market. Project OSCAR members will complete this project and write up a description of the system for publication in the amateur radio media so that anyone interested in Mode S will be able to make the move into this new area of OSCAR communication.

Finally, in response to many who have asked for information, Project OSCAR will sponsor a seminar about operating on all of the available amateur radio satellites. This seminar will take place on September 29 and 30 on the San Francisco Peninsula. In addition to a full schedule of talks aimed at the beginning and advanced satellite user, there will be demonstrations available, plus published papers provided to all in attendance. Complete details of this OSCAR seminar, along with names of the speakers scheduled to speak, will appear in the AMSAT bulletins, on Packet and phone BBS', and the usual amateur radio media.

Microsat checkout continues

(AMSAT news service bulletin 104.01 from AMSAT HQ, April 14, 1990)

Engineering team testing new software to gain operating efficiencies.

The AMSAT Satellite Factory continues to make progress in characterising the Microsats and they move closer to full commissioning. Over the past few weeks Bob McGwier, N4HY and Harold Price, NK6K, have been working on new data formats for Whole Orbit Data (WOD) dumps. These new formats present data in binary form, saving about 10,000 bytes of code in the operating system. This latest software load allows the operating system to run faster. In the WOD collection environment, every 10 seconds the on-board housekeeping computer samples several channels and continues this throughout an entire orbit. Once data for a number of orbits have been stored in on-board memory, Bob and Harold can command the microsats to downlink the information stored.

Using this technique, they have determined that AO-16 has achieved magnetic lock (with the earth). This results in the +Z surface pointing toward the earth when over the south pole and away from the earth when over the north pole. They feel that there is still some residual wobble but, for the most part, the satellite has stabilised.

As Bob and Harold continue to test this software, the digipeating function of AO-16 will be disabled. To determine if the digipeater is active, check the LSTAT telemetry line. If you see "d:0" this means the digipeater is off, "d:1" means the digipeater is on. Telemetry normally comes down once every 10 seconds. When a packet is digipeated, the time interval switches to 30 seconds.

If telemetry is coming down each 10 seconds, look at the LSTAT line. If d=0, DON'T TRANSMIT. If you see other digipeat activity, the digipeater is on, and it is OK to transmit. You must specify the spacecraft callsign as a digipeater to get digipeated, eg, PACSAT-1. This is because there are multiple spacecraft on various uplink frequencies.

Radio M1/RUDAK-2 Data Sheet update/ correction

RADIO-M1/RUDAK-2 Data Sheet

AMSAT-DL/AMSAT-U joint project
AMSAT-DL Journal March 1990
(Updated document 17 April 1990)

RUDAK II (2nd generation) is part of the Russian amateur radio transponder "RADIO-M1". "M" refers to Molodechno, White Russia, USSR. RUDAK is the German abbreviation for Regenerative Transponder for Digital Amateur Radio Communications.The transponder is a joint project of AMSAT-U-ORBITA in Molodechno, the Adventure Club in Moscow and AMSAT-DL/RUDAK group in Marburg, Munich and Hanover.

Launch: June, 1990 from Plesetsk, USSR with PROTON rocket
Satellite: "Subtenant" to GEOS, a Russian geological research satellite
Orbit: Circular orbit at 1000 km altitude and 83 deg inclination.
Orbital period = 105 minutes
Amateur Radio Payload: Linear and regenerative transponders for analog and digital communications and telemetry beacons.

Linear Transponder 1:

Uplink: 435.102-435.022 MHz (80 kHz)
Downlink: 145.852-145.932 MHz (inverted)
Output power: 10 Watts maximum.
Beacon CW telemetry (8 parameters): 145.822 MHz 0.2 Watts
Beacon digital telemetry (30 parameters) 1100 bps PSK
R+Scrambler 2 kHz deviation: 145.952 MHz 0.4 Watts

Regenerative Transponder RUDAK-2:

Two on-board computers with IPS operating system for packet radio (AX.25) (Mailbox, telecommunications experiment with digital signal processing up to nearly 20 kHz, etc). 1 mByte RAM disk. four separate uplink channels.

Gain of satellite RX and TX antennas: 2.3 dBi each (dipoles)

Input sensitivity: < -125 dBm (435 MHz) for a C/No of 45 dBHz

UPLINK:

SAT-RX-1: 435.016 MHz +-10 kHz 1200 bps, FSK, NRZIC/Biphase-M (JAS, PACSAT)
SAT-RX-2: 435.155 MHz+-10 kHz (AFC) 2400 bps, BPSK, Biphase-S
SAT-RX-3a: 435.193 MHz +-10 kHz (AFC) 4800 bps, RSM, NRZIC/Biphase-M
SAT-RX-3b: 435.193MHz +-10 kHz (AFC) 9600 bps, RSM, NRZI (NRZ-S) + Scrambler
SAT-RX-4: 435.041MHz +-10 kHz (digital AFC) RX for RTX-DSP experiments

Output signals of RX-4 are the In-phase and quadrature components, I(t) and Q(t), which are sent to the DSP RTX immediately after analog/digital conversion with eight-bit resolution. This supports various modulation modes depending on the software. All other receivers provide data (D) and clock (C) at their outputs.

DOWNLINK:

The downlink can be switched to the following operating modes:

Transmit frequency: 145.983 MHz
Output power: 2 Watts nominal (10 Watts maximum)

Mode 1: 1200 bps, BPSK, NRZI (NRZ-S) (like FO-20)
Mode 2: 400 bps, BPSK, Biphase-S (AMSAT mode for OSCAR-13 beacon)
Mode 3: 2400 bps, BPSK, Biphase-S (planned for OSCAR-13)
Mode 4: 4800 bps, RSM, NRZIC (Biphase-M) (like 4800 bps uplink)
Mode 5: 9600 bps, RSM, NRZI (NRZ-S) + Scrambler (like 9600 bps uplink)
Mode 6: CW keying (only for special events)
Mode 7: FSK (F1 or F2B), e.g. RTTY, SSTV, FAX etc (only for special events)
Mode 8: FM modulated by D/A signals from DSP-RISC processor (e.g. speech)

Power consumption: 14V @ 350 mA (max) = 4.9 W; Standby: 80 mA (RUDAK without power amplifier)

Mass: 6.2 kg
Dimensions:230 x 320 x 120 mm
Linear Transponder 2:
Uplink: 435.123-435.043 MHz (80 kHz)
Downlink: 145.866-145.946 MHz
Output power: 10 Watts maximum
Beacon CW telemetry (8 parameters) 145.948 MHz 0.2 Watts
Beacon digital telemetry (30 parameters) 1100 bps PSK
R+Scrambler 2 kHz deviation 145.838 MHz 0.4 Watts
Beacon digital telemetry (30 parameters) 1100 bps PSK
R+Scrambler 2 kHz deviation 145.800 MHz 2 Watts
Total power consumption: 40 Watts (maximum)
Total mass: 22 kg
Total dimensions: 480 x 400 x 300 mm
73s de Peter DB2OS
PS: 1100 bps PSK TLM on the analog transponder is a new feature and it seems to be NOT a typing error, but I will check that.

73s from Maurie VK5EA

FTAC NEWS

John Martin VK3ZJC
3 Vernal Ave Mitcham 3132

ATV REPEATERS — VK4/5

Output	Input	Call	Site	Service Area	Status
579.250	426.250	VK4RTV	Spring Hill	Brisbane	0
579.250	426.250	VK4RAT	Mt Stuart	Townsville	0
444.250	426.250	VK5RON	Barunga Ra	Clare Valley	0
579.250	426.250	VK5RTV	O'Halloran Hill	Adelaide	0

Data Base

The beacon and repeater Data Base update is nearly complete. VK2, 3 and 6 have supplied information for the update, and it is not too late for other states to provide additions or corrections.

Three More 5760 MHz Records

Following the new national 5760 MHz record of 176.4 km - set last year by VK5NT and VK5ZO - Steve Hutcheon VK4ZSH has been travelling the country setting new state records on this band. They are: VK1 record (14.7 km) with Ed Penikis VK1VP; VK2 record (144.3 km) with Warren Bates VK4ZBW; VK4 record (173.4 km) again with VK4ZBW. Steve also visited Melbourne recently and made a 5760 MHz contact with Les Jenkins VK3ZBJ, which will no doubt result in another record claim. Congratulations to all concerned.

Feedback

There has been little response to the proposals on the 50 MHz beacon segment, the 6 metre repeater and packet radio channels, and the 2 metre packet radio segment. These proposals will be put to Federal Executive in the near future, so if you have any comments or suggestions please write before the decisions are made!

Band Plan Proposals

Comments are requested on a proposal to restore a 7 MHz wide ATV channel at 1285 - 1292 MHz. This would involve shifting the digital and voice simplex segments of the 23 cm band to 1283 - 1285 MHz. At 25 KHz channel spacing, this would provide 40 voice and 40 digital simplex channels. Repeater channel allocations would not be affected. Proposed new band plans for 13 cm and above will be published soon.

SPOTLIGHT ON SWLing

Robin L Harwood VK7RH
52 Connaught Cres West Launceston 7250

In April, Radio Prague terminated its external broadcasting, following the "Revolution" in November of last year. The new, non-communist government closed down the external wing of Radio Prague because of its past associations with the previous regime. The idea is that they would be vetting staff at Radio Prague to see where they now lie politically, before allowing them back to the microphone. The only shortwave program emanating from Prague at present is the Inter program, which is aired in English, Czech, French, Russian and German. It can be heard on 9505 or 7345 kHz from 0600 UTC and is primarily aimed for European tourists. The "Inter" program was prepared in Radio Prague,yet by different personnel from that of other sections of Radio Prague.

As I mentioned in last month's column, the Lithuanian crisis could be very interesting, as it has been. Oddly enough, The World Service of Radio Moscow appears to be giving the most comprehensive coverage of what has been happening,both in Moscow and in Lithuania itself. I do know that the BBC Monitoring Service in Caversham Park, near Reading, is keeping a close ear to transmissions coming from Vilnius, the Lithuanian capital plus other Baltic broadcasters.

I have just been notified by Bill Martin, VK2COP, the IARUMS Region 3 co-ordinator, that there have been significant alterations to the special spectrum survey over the next 12 months. Previously, the range between 7100 and 7300 kHz and 14250 and 14350 kHz was to be scanned for all non-amateur transmissions. But the IARU Monitoring Service has now decided to scan between 6765 and 7000 kHz and delete 7100 to 7300 kHz and 14250 to 14350 kHz. This has made it a little easier to concentrate on the rest of the spectrum under study, although I personally found the 7.1 to 7.3kHz section interesting from a monitoring perspective. Although, over April, I was unable to fulfil my allotted quota of monitoring activities, due to other pressing commitments. This will be rectified in the coming months.

I am also finding the 22-metre broadcasting allocation very interesting, as more international stations are increasingly using it. As mentioned recently, Radio Australia commenced using it in March, as did the BBC World Service. Personally I find that 13 MHz is more consistent than 15 or 11 MHz here in Northern Tasmania. I was somewhat disappointed with the lack of response from international broadcasters to the 11-metre broadcasting allocation of 25600 to 26100 kHz. Only a handful of stations bothered to utilize it, and I would not be surprised if this allocation is deleted after WARC 1992. At the peak of previous sunspot cycles, I can recall excellent propagation and signal levels on this band.

Yet another international broadcaster has severely curtailed its broadcasting output. Radio RSA in Johannesburg, South Africa is to cease broadcasting to non-African target areas from May 1. Budgetary reasons have been cited as the reason. Personally I would have expected an increase in RSA's output, because of ongoing developments within that nation at present.

Well, that is all for June. Already half of 1990 has gone. I'm convinced that the years seem to be going more quickly as one gets older. Anyhow, good listening and 73 DE VK7RH.

INTRUDER WATCH

GORDON LOVEDAY VK4KAL FEDERAL INTRUDER WATCH CO-ORDINATOR
'AVIEMORE' RUBYVALE 4702

Intruder Watch Information

Why does the Intruder Watch need so many reports of Intruders observed in the Amateur bands? The authorities need to be convinced that Intruders are causing harmful interference to the Amateur service, and the occasional report is not going to impress them. Many reports on THE SAME INTRUDERS are needed to let the authorities know that we want some action taken to have them removed from the Amateur bands.

Where do you obtain Observers' Log Sheets? — From your Divisional Intruder Watch Co-ordinator.

Who is he? — Check with your Divisional Council, or look under 'Intruder Watch' in the Call-book.

Where do you send your completed Observers' Log Sheet? — Back to your Divisional Intruder Watch Co-ordinator.

Where does he send it? — To the Federal Intruder Watch Co-ordinator.

What does the Federal Intruder Watch Co-ordinator do with it? — He compiles a monthly summary, and keeps records of all the Intruders reported.

What happens to the summary? — One copy is sent to the IARU Region 3 Intruder Watch Co-ordinator in New Zealand, one copy goes to the Department of Communications in Melbourne, and one copy is retained by the Federal Co-ordinator for record purposes.

What does the IARU Region 3 Co-ordinator do with the summary? — He combines it with the summaries from other IARU Region 3 summaries, and a copy is sent to Intruder Watch HQ in the UK, where it ends up as a world summary, and the number and details of Intruders can then be compared.

Ultimate complaints can ONLY be directed to an offending administration's Intruders by the Administration of the complainant country at this stage. However, this could be changed in the near future and, hopefully, this will be a more effective way of registering complaints.

So then, it should be obvious that the Intruder Watch needs great numbers of complaints in the form of observers' reports, and the most effective manner is to have the most common and regular Intruders reported EACH MONTH, so that a legitimate case can be built up against them.

An Intruder DOES NOT, insofar as the Intruder Watch is concerned, include 'pirate' stations, or those using foul or abusive language. These should be reported directly to the DOC. The Intruders we speak of in the Intruder Watch are those transmissions emanating from governmental, commercial or military sources. These sources are all to be heard on the HF bands. Possibly the most prevalent mode of emission used by the Intruders is that of radio-teletype (RTTY). These can be difficult to identify, but more about that later.

The submission of a written objection against Intruder stations is simply a matter of filling in an Observer's Log Sheet (OLS) and forwarding it to your Divisional Intruder Watch Co-ordinator, ideally to reach him by the end of the month. It is essential that you nominate the type of receiver(s) and antenna(s) used and, if you can, please give bearings. If you suffer harmful interference from the Intruder, say soon the sheet. This is good evidence. Please state ALL times in UTC. These sheets are obtainable from the Federal Intruder Watch Co-ordinator, or from your Divisional Office.

Intruder Modes of Emission

New designations of modes of emission came into force at the start of 1982. Here we show comparisons of the old and new designations of the more common modes.

old designation:	new:
A0	NON
A1	A1A (Aural)
A2	A2A (Aural)
A3	A3E
A3H	H3E
A3A	R3E
A3J	J3E
A3B	B8E
A4	A3C
A4A	R3C
A5C	C3F (TV)
A7A	R7B
A9B	B9W
F6	F7B
F1	F1B (RTTY)
PO (Woodpecker OHR)	PON

Some further information on modes:

Mode A1A (CW)

Intruder stations using CW are mostly using code-groups. Don't worry if the message doesn't make much sense.Just satisfy yourself that it is in fact an Intruder, but DO listen for an identifying call-sign. An example is on 21115 kHz at 0600, 0800 or 1000 hrs UTC.

Mode PON: The Infamous 'Woodpecker'

The best evidence in reporting this (and other Intruders) is to mention that the Intruder caused harmful interference to your QSO with such-and-such a station. Quote any comments your contact may make regarding the Intruder, such as, "That woodpecker sure is strong tonight, I can hardly copy you." Measure how wide his transmission is.

Mode R7B: Amplitude-modulated, reduced-carrier, multi-channel, voice frequency telegraphy:

This one sounds for all the world like a big circular-saw, such as those found in a sawmill. He is very common on the Amateur bands, and usually very strong. Average bandwidth around 7 kHz. Common on 20 metres.

Mode B9W: Phase-modulated pulse multi-channel transmission:

This one can sound like the R7b above, but the classical sound is that of a distant jet aero engine. Usually accompanied by two (or one) guard carriers, about 3 kHz apart. If you can't hear the carriers, it could well be an R7B signal you are hearing.

Mode A3E: AM Broadcasting:

This one is familiar to us all, and should need no explanation. Specific examples can be heard nightly on 7025, 7065 and 7095 kHz. Some of these are of obvious Asian origin, and can be heard very clearly. If you hear a carrier when you are on SSB mode, switch to AM, and often an AM broadcast station Intruder will become apparent.

Mode F1: Radio-teletype and F1 Morse:

Probably the most prevalent mode employed by Intruder stations, and a real problem on the Amateur HF bands. If you have the RTTY equipment, try for some hard copy. If not, log him as usual, and try to establish the shift of his transmission.

Wind up to the high-frequency side of the signal and zero-beat. Slowly tune down to the low side of his signal and you will hear the second frequency creep in. The difference between the two frequencies is the shift of operation, and the point midway between the two IS THE FREQUENCY OF TRANSMISSION. Common Intruder shifts employed are 250, 500, 1000 and 2000 Hz.

The usual shift employed by AMATEURS is that of 170 Hz, and Amateurs can only use shifts of up to 850 Hz.

Be sure that you are in fact monitoring a RTTY transmission. Amateur slow-scan television has a certain similarity, and also AMTOR (Amateur Microprocessor Teleprinter Over Radio) in one mode sounds like very fast RTTY.A blank C90 cassette tape sent to the Federal Intruder Watch Co-ordinator will be returned to the inquirer with all these before-mentioned modes of emission demonstrated.

RTTY transmissions come in many shapes and forms. Some of the examples appear below:

REVERSALS: Reversals, which are used for adjustment purposes or to test machines, are a series of fast dots.

BLANKS: Blanks are a series of dots for the mark, and a series of dashes for the space.

The machine is actually idling at this stage.

RYs: RYs is a series of dots at intervals, and is also used to test machines. They usually show a definite rhythm.

All these foregoing can be heard to advantage on the demonstration tape.

Don't be frightened to submit an Intruder report because you're unsure of the mode. Just describe it to the best of your ability.

Try to observe if any Intruders are coming up regularly. Some of them are as regular as clockwork, and these are the ones worth reporting.

The Intruder Watch is only as good as the help it gets from Amateurs who send in written objections to the presence of Intruders on the Amateur bands.

Please send any reports of Intruder stations to your Divisional Intruder Watch Co-ordinator, and help preserve the Amateur bands FOR Amateurs.

PLEASE HELP THE INTRUDER WATCH

Allocation of Frequency Spectrum for Purposes of the Intruder Watch

160 metres:

1800-1825 kHz —
Amateur Service is Primary Service. Exclusive to Amateur operators.

1825-1875 kHz —
Amateur Service is Secondary Service. Not exclusive to Amateur operators.

80 metres:

3500-3700 kHz and 3794-3800 kHz.
In International Amateur Radio Union, Region 3, the 80-metre band is shared with fixed Services. It is not exclusive to the Amateur service. RTTY and CW non-Amateur signals cannot be considered to be Intruders. But broadcast stations are Intruders.

40 metres:

7000-7100 kHz —
The Amateur service is the primary service, and this segment is exclusive to Amateur operators. Any non-amateur signals are those of Intruders.

7100-7300 kHz —
Is shared by international broadcasting stations ONLY. Any non-Amateur signal OTHER THAN broadcasters can be considered to be an Intruder. Non-Amateur RTTY and CW signals are Intruders.

30 metres:

10100-10150 kHz –
Shared with fixed stations. The Amateur service does not have exclusive use of these frequencies. Broadcast stations are Intruders.

20 metres:

14000-14250 kHz —
Amateur service is primary service. This segment is exclusive to the Amateur operators. Any non-amateur signals are those of Intruders.

14250-14350 kHz —
This segment is shared with Iran, the People's Republic of China and the USSR fixed services.It is NOT exclusive to the Amateur service. RTTY and CW signals which are non-Amateur cannot be considered to be Intruders. But broadcast stations are Intruders.

17 metres:

18068-18168 kHz —
The Amateur service shares this segment with fixed services. Non-Amateur RTTY and CW are not Intruders. But broadcasters are.

15 metres:

2100-21450 kHz —
The Amateur service is the primary service. This segment is exclusive to Amateur operators. Any non-Amateur signals are Intruders.

12 metres:

24890-24990 kHz —
This band is shared, and non-Amateur RTTY and CW signals are not Intruders. But broadcasters are.

10 metres:

28000-297000 kHz _
The Amateur service is the primary service. This segment is exclusive to Amateur operators. Any non-Amateur signals are Intruders.

Intruder Watch

Over the past 12 months I've had a good look at the Monitoring Service and its direction. I'm of the opinion it is too lax in its achievements. We have put into place one or two ideas suggested by DoTC to assist it in deciding which intruders it will target for possible removal (I wish them luck) . . . on the other hand, too much monitoring time has been wasted logging intruders that DoTC will have great difficulty in removing — because they are NOT of a commercial nature.

I refer to CB operators on the 28MHz band. Admittedly, they are a nuisance, but having ignored their country's regulations, they are most unlikely to take further notice of our government's directives. We can work over them, if we set about it. Those of us who can run the full power on these frequencies should be encouraged to do so. Our friends in the US very effectively remove these intruders with this method. I think a persistent signal alongside would eventually move them on — and if enough operators persist on 10m, we eventually would have the majority of the band unadulterated.The present sunspot cycle has a lot to do with the strength of these intruders.

It seems to me that possibly these CBers DO NOT KNOW HOW FAR THEIR SIGNALS RADIATE, and maybe we are causing untold distress to them — what a happy thought. However, DO NOT, UNDER ANY CIRCUMSTANCES, MOVE OFF FREQUENCY FOR AN INTRUDER.

ALARA

JOY COLLIS VK2EBX
PO BOX 22 YEOVAL 2868

The members of ALARA would like to express their concern for the victims of the recent widespread flooding in Queensland, New South Wales and Victoria. For anyone who has never experienced it, the total devastation is hard to imagine, and cleaning up and repairing will be a daunting task.

Intruder Watch. How can we Help?

Perhaps the prevalence of intruders on the amateur bands is something we do not pay enough attention to. The following comments from Bill Martin VK2COP point out how we can assist:

"As the Monitoring System Co-ordinator for IARU Region 3, it occurred to me that the Monitoring System (Intruder Watch) doesn't hear from the ladies too often.

The system always needs the support of amateurs and SWLs in reporting transmissions from stations which should not be using our frequencies. We are concerned with transmissions from commercial, governmental and military stations. All these sources have their own allocated frequencies, so we should strongly object when they use ours.

Any intruder report takes the form of a log entry, including frequency, date (UTC), time (UTC), mode of emission, bearing (if possible), callsign of unauthorised station (if obtained) and any comments.

These reports can be sent to me (Bill Martin VK2COP, 33 Somerville Road, Hornsby Heights NSW 2077) or to the Australian co-ordinator, Gordon Loveday VK4KAL, "Aviemore", Rubyvale, Queensland 4702.

This is an ongoing work, and must be maintained to try to keep the amateur bands free for amateur operation. The Monitoring System is always in need of reports on intruders.

Report forms can be obtained from VK4KAL.

Perhaps one or more of your members may be willing to spend the time to send in a report now and then."

Further information can be obtained from Bill VK2COP or Gordon VK4KAL, who would be most appreciative of any help we can give

them. So — the next time you hear an emission which appears suspect in any way, scribble down the details, and get a report off to Bill or Gordon. It is our own radio bands we are trying to save!

Alarameet 1990

The ALARA get-together is now only a few months away; most people have booked their accommodation, and our ALARAMEET co-ordinator (Maria VK5BMT) has an interesting program worked out. The previous two ALARA get-togethers in 1984, Mildura and 1987, Adelaide were very successful, and we are looking forward to an equally enjoyable time in Dubbo this year.

The 222 YL Net

Although Barry VK7GE can no longer act as controller of the YL net due to work commitments, the YLs are still very active on 14.222 on Mondays at 0600 UTC. Heather VK2HD "fills the bill" admirably on many occasions. Other controllers have been Dawn ZL2AGX, Bev VK6DE and Mavis VK3KS. Harry VK2BJL was rather surprised to find himself in that position one Monday afternoon. Our thanks for helping us out on that particular Monday, Harry.

In spite of what must be deliberate QRM at times from the few, the majority of OMs do all they can to "give us a go", assisting with DX information and keeping the frequency clear. Our thanks for their help and consideration.

Awards update

155	16.1.90	Iris Osborne	G0FIW	2 stickers
156	24.1.90	Egbert Hertsen	ONL40003	All SSB
157	2.2.90	Aimee Tuband	FY4FC	4 stickers

New members

A warm welcome to new members:

Dana N0FYQ, Jane VK4FVJ, Joanna G1UEQ, Marjorie VK2VME, Lyndell VK5KLO.

Congratulations on upgraded callsign to Margaret VK3END (formerly VK3MCZ).

73/33 Joy

Joy — Profile of a Correspondent

Joy was born in London and spent her childhood there, which included the years of World War II. She has many stories of her experiences of the bombing and of food rationing during those years.

She speaks highly of her father who had fought in WWI and was a member of the Home Guard in WWII. He worked in the developing section of a film company and was a 'grand and godly English gentleman'.

Her mother was ill for many years with Parkinson's disease and died when Joy was only 18.

About a year after her mother's death, in 1950 Joy and her father emigrated to Australia. They started life here in Healesville, where Joy had a pen pal, but after about 18 months they set off on a motorbike and sidecar to see more of Australia.

One of their stops was in Griffith where Joy met Dan and where she was married in August 1952.

The next 20 years were occupied with raising six children (three of each) in various parts of rural NSW and Victoria. Joy taught the children by correspondence to begin with, but eventually they were forced to move to Leeton, and later to Wellington, so they were

Australian Ladies' Amateur Radio Association

List of Members as at 31st March 1990

VK2AMU Betty
VK2BBM Beryl
VK2DDB Dorothy
VK2DJO Norma
VK2EBX Joy
VK2HD Heather
VK2MI Joyce
VK2NPG Nancy
VK2PNG Margaret
VK2PXS Bobbie
VK2VCC Chris
VK2VME Marjorie
Jean Darling

VK3AEB Erika
VK3AGO Lorrie
VK3AYL Rae
VK3BBL Bonnie
VK3BIR Mavis
VK3BJB Joan
VK3BRE Mona
VK3BTU Janet
VK3BYK Barbara
VK3CWA Margaret
VK3CYL Kim
VK3DML Margaret
VK3DMS Marilyn
VK3DVT Valda
VK3DYF Bron
VK3DYL Gwen
VK3END Margaret
VK3FML Marlene
VK3JAW Marlene
VK3JQ Liz
VK3KS Mavis
VK3MDR Jenny
VK3PRV Patricia
VK3PYL Phyl
VK3UE Clarice
VK3VAN Jessie
VK3XBA Kathy
VK3YL Austine
Jean Truebridge
Raedie Fowler
Muriel May
Jean Shaw
VK4ABM Chris
VK4ACJ Sandra
VK4ANZ Noela
VK4ANN Anne
VK4AOE Margaret
VK4ATK Connie

VK4BDH Dulcie
VK4CPL Phyl
VK4BZL Jeanette
VK4JO Jo-Anne
VK4IA Daphne
VK4FVJ Jane
VK4KCA Christine
VK4MP Pat
VK4MUM Ann
VK4NAM Dorothy
VK4NNJ Valarie
VK4PT Pat
VK4PZ Mary
VK4QW Cecily
VK4VG Josie
VK4VR Val
VK4YC Alma
Bonnie Pounsett

VK5ANW Jenny
VK5AOV Meg
VK5BMT Maria
VK5CTY Christine
VK5KLO Lyndell
VK5NEI Janet
VK5YL Denise
VK5ZYL Michele
Pauline Koen
Bev Tamblyn

VK6DE Bev
VK6DJL Jan
VK6JMP Joan
VK6NKU Peggy
VK6QM Margaret
VK6YF Poppy
VK6YL Gillian
VK6ZLZ Christine
Olive Couch
JuneGreenaway
Lynda Francis

VK7HD Helene
VK7TN Grace

VK8MM Mina
VK8NKN Maree
VK8NXL Rae

VK9NL Kirsti

Overseas Members

CP5LE Barbara
DJ1TE Christa
DF2SL Anny
DL3LG Sigrid
DF3LX Heidi
DK5TT Margot
DJ6US Walli
DL2HBM Marga
FK8FA Aimee
JA1AEQ Fumi
JH1GMZ Akiyo
JJ1CAS Hiromi
JI1VLV Nanako
J36JQC Mizuyo
JR5MVX Masayo
K1IJV Jean
WA1UVJ Karla
W2GLB/7 Phyllis
WB2YBA Christine
KA3CEO Jeanne
WA3HUP Mary Ann
WB3CON Ruthanna
WB3EFQ Lois
WA4NRX Merilyn
KA5ONE Betty
KK5L Carol
WD5FOX Darleen
KA5WXE Karen
K6INK Jerrie
KA6V Joanie
KA6NZK Elizabeth
KB6CLL Mary
N6GGR Maxine
N6GZW Claudia
WA6OET Jessie
N7KEL Jean
KC7TE Daurel
KD7RA Gerry
KD7YB Joan
KO7Q Shirlee
WA7TLL Marion
WB7SUQ Mary
KB8RT Lee
WD8MEV Shirley
K9RXK Ann
KA0SNF Cathy
KA0VWP Allura
N0FYO Dana
G1UEQ Joanna
G3HCQ Sheila
G4EZI Diana
G4KFP Jasmine
G4KVR Cilla

G4VFC Dee
F0CCI Angelika
G0CTQ Audrey
G0EIX Rita
G0FIW Iris
Jeanette Arter
GM4LUX Shirley
GM4UXX Anne
GM6KAY Kay
GW0ARP Jean
IT9KXI Santina
OH3ST Eeva
PA3DST Paula
PY2JY Inge
SM5HYL Rozita
SM0HNV Raija
VE6YW Hallie
VE7YL Elizabeth
VE7CBK Bobby
VE7CIX Rae
VE7DKC Margaret
VE7LOH Muriel
VR6YL Betty
ZL1ALE Aola
ZL1ALK Celia
ZL1BBN Win
ZL1BDZ Clarrie
ZL1BIZ Elva
ZL1BWQ Ethel
ZL1BQW Christine
ZL1CAV Phillipa
ZL1OC Vicki
ZL1TDB Margaret
ZL2ADK Cathy
ZL2AGX Dawn
ZL2AWP Alma
ZL2AZY Biny
ZL2BHJ Jill
ZL2BOA Marilyn
ZL2BOD Jeanne
ZL2BBOV Anne
ZL2PQ Lynn
ZL2QW Pauline
ZL2QY Pearl
ZL2TZG Gail
ZL2UKG Gwen
ZL2VQ Carol
ZL2GW Val
ZL3VR Anne
ZL4IO Melva
Kathy Armstrong
ZS1YL Lee
ZS5DC Diane
ZS5V Mary
ZS5YO Mimi
ZS6GH Diana
ZS6VC Pat

nearer schools.

Joy first got "hooked" on radio through CB when she had more time for herself as the children became more independent. Then, in 1978, Joy turned to amateur radio and studied first for her Novice and then for her AOCP licence as VK2EBX. Her dedication to becoming an amateur can be judged by the fact that after doing the course by correspondence she had to travel 250 miles (400 km) to sit for each exam!! (The only female in the 40 applicants, what's more). Her previous callsigns were VK2VJV and VK2KJC. Her son Will held the callsign VK2VJC before his death in 1986, so he was able to share Joy's interest, but though her husband, Dan, is interested, he has not yet found time for the study needed.

Joy is an active DX participant in amateur radio, particularly, but not only, in the field of ladies activities. she has may DX awards including the DXCC. She is an active member of ALARA and of WARO, YLRL, BYLARA and CLARA in sister countries. She is a regular member of several nets run by and for lady operators. Joy is now the ALARA publicity officer and correspondent for AR, offices she took over from Margaret VK3DML in 1985. She is also the VK2 representative on the ALARA committee.

Her interest in writing is not limited to amateur radio matters, as shown by several poems of hers that have been printed in AR and in various other magazines, worldwide. In 1983 she won the Bronze Swagman Award for bush poets in a competition run from Winton in Queensland.

As shown by the range of topics mentioned in the ALARA notes each month, Joy has an interest in many aspects of our hobby and can share that interest with others in well written prose.

Contributed by Joy's daughter, Janet, Doug Tamblyn VK5PDT, Marilyn VK3DMS, Christine VK5CTY and Jenny VK5ANW.

Joy Collis VK2EBX

WARC 92 UPDATE

DAVID WARDLAW VK3ADW
WIA WARC-92 TEAM LEADER

The IARU launches WARC Countdown to aid WARC-92 preparations

A newsletter 'WARC Countdown' is being produced by the International Secretariat of the IARU at the directive of the IARU Administrative Council.

The first issue outlines the functions of WARCS and looks at the likely agenda for WARC-92. This subject has already been covered in 'Amateur Radio' April 1990:

"The IARU Administrative Council is planning to produce documentation of the value of amateur radio to the world community, including, but not necessarily limited to, the following areas:

a) Amateur radio as a national resource

b) Amateur radio as a vital component of community service

c) The need for amateur radio in emergencies, both national and international

d) The use of amateur radio as a basis for developing technology and conducting experimentation that will benefit all communications services."

Comments from members may turn up something that has been overlooked by others.

Also in 'WARC Countdown' is a section devoted to the importance of the CCIR which is of interest:

CCIR: Key to WARC Technical Preparation

The International Radio Consultative Committee, or CCIR, studies technical and operational characteristics of radio systems. Issues for study are identified as *Questions*. *Reports* are the documented results of investigations. The end product of the CCIR is an international standard, called a *Recommendation*. The main work of the CCIR is carried out by 11 study groups with responsibility for specific radio services of technical investigations, such as propagation and spectrum management. At meetings of the study groups, working groups are formed to consider input papers submitted by administrations or recognised international organisations. Interim working parties, or IWPs, may be formed within a study group, and joint interim working parties, or JIWPs, involve two or more study groups. These study groups conduct their regular work in four-year study periods, the one just concluded being 1986-1990. The output papers resulting from the 1986-1990 study period have been distributed to administrations and study group delegates, and eventually will be for sale to the public in the form of *Green Books* arranged by radio service and printed in several languages. When there is a need, the CCIR may depart from this schedule, such as to prepare technical reports for a WARC.

The Green Book technical documentation for the Amateur and Amateur-Satellite Services consists of Question 48 and Report N/8, both with the title of "Techniques and Frequency Usage in the Amateur and Amateur-Satellite Services". Report N/8 has several appendices which detail technical characteristics, frequency usage, and operational and technical achievements of these services. The Green Book also contains Recommendations 476-4 (1986) and 625 (1986), which together define the technical standards for the error-correcting radioteleprinter mode used in the Maritime Mobile Service and known to amateurs as AMTOR.

Currently, nearly all study groups have IWPs, or are participating in JIWPs, doing preparatory work in anticipation of the WARC-92 agenda to be decided by the Administrative Council in June 1990. Several IWPs and JIWPs are presently scheduled to meet during July through October 1990. Three important meetings are: IWP 8/15 (October 8-19, Geneva, 0.5-3 GHz mobile and mobile-satellite frequencies, 12.7-23 GHz HDTV allocations, and new space services above 20 GHz); JIWP 10.3.6-8/1 (time and place to be announced, expansion of HF broadcasting allocations); and, JIWP WARC-92 (April 1991, place to be announced, overall preparation of the CCIR report to WARC-92)."

Since the last WARC-92 update there have been meetings of the Frequency, Technical and Regulatory committees. The WIA was represented at all these meetings. The main topic of concern being the scope of the agenda of WARC-92 which will be decided by the ITU Administrative Council which meets in June. Australia is a member of the ITU Administrative Council and will have a say in the formulation of the agenda for WARC-92.

Once the agenda is available, we will all be able to get down to more specific detail.

A number of our fellow amateur societies are very concerned about the possible effects of any expansion of HF broadcasting. As you know, this could affect the 7MHz band and will need to be watched very closely.

DIVISIONAL NOTES

FORWARD BIAS

PHIL CLARK VK1PC

We welcome two more members to the ACT division.

At the committee meeting held on 10th April, A L Cook VK1KIS and P J Weaver VK7ZPJ were accepted as members of the division.

Field Day

As mentioned last time, the divisional station for the John Moyle Memorial field day was established at the Kowen Forest fire tower site. Now the stories of that epic event are coming to light! Now the tales of individual and group heroism can be told! (Those that are printable, at least).

It was decided that the best way to get the TH6DXX beam up in the air was to use a 'cherry-picker', so one was duly borrowed (scrounged) for the weekend. It was set up on the hilltop. The beam and rotator were mounted and the cable attached to its 15-metre boom. The crowd gathered around as Chris went to start the motor.Unfortunately, the motor had decided that today was to be a 'rostered day off' and no work was to be performed. "Oh #%*-!" (dear?) said Chris.

The group gathered around and stared with gloom at the maze of wires, buttons, lights, hydraulic pipes and the defunct motor. There was no alternative but open-heart surgery. Sleeves were rolled up, cans of anaesthetic administered to the operating team and gallery, and the screwdrivers, pliers and tools laid out.

While the "operation" was being carried out, work went on getting the rest of the station together. Bruce, at great risk to personal beauty and fame, climbed the underside of the ladder up the fire tower to attach the rope for the dipoles.

"Look!" someone said, "There's Spiderman!"

"No it's not," said another voice, "it's Frogman."

Meanwhile, the canvas "shacks" had been erected, the wire antennas strung and the equipment installed. The generators were positioned and fuelled ready to start. Bob considered canvas to be undignified, so he decided to operate the VHF and UHF from his ostentatious mobile home! He spent most of his time trying to find where to connect his shower outlet, and how to get the best view from the dining room window.

About this time, there was a mighty roar (well, a "put-put", anyway) and a cloud of blue smoke from the cherry-picker — surgery had been successful! A cheer went up as the beam headed skyward.

In spite of everything, VK1WI went "on the air" at 1430 on Saturday with 20 and 40 metres most active. There was a total of 1084 contacts on bands covering 80m, 40m, 20m, 15m, 10m, 2m and 70cm.

The station closed again at 1430 on Sunday, and guess what! The cherry-picker (with Ted's beam on top) refused to come down. Chris then addressed the machine with a few choice words about its ancestry and possible destination and, with some TLC, down it came, much to Ted's relief.

Paul VK2CJ did a great job of organising and co-ordinating the effort, and thanks are extended to him and all who helped or participated over the weekend.

Finally, special thanks to Ted VK1AOP, Chris VK1DO and John VK1ZX for the equipment that they lent for the operation, and the ACT Police for their support with the provision of generators for the station.

VK1WI team for the John Moyle Field Day. Back row L to R — Peter, Laurie, Paul VK2CJ, Ted VK1AOP, Lothar VK1KLS, Jim VK1JS, John VK1ZX. Front row L to R — Murray VK1ZMD, Chris VK1DO, Bob VK2YRX, Laurie VK1KLB. Mal VK1MC is missing from the photo.

Technical Points

At the March monthly meeting of the division, Paul VK1BX, gave a very interesting talk on radio equipment installation in vehicles. The talk covered points such as alternator and ignition noise, its cases and possible cures, return current paths when the battery is charged and discharged and when the engine is started (or where NOT to connect your valuable set!), and compatibility with other electronic vehicle systems. He brought out some very interesting and educational points about alternators and the types of regulators and diodes used with them and some of the effects that can result, and showed some of the ways that noise can be introduced into antenna and microphone leads via current flowing in the screen.

On the subject of meetings, please tell us your ideas about what talks, speakers, films etc you would like. Let any committee member know and we will try to include your ideas as the subject for a presentation. Perhaps you have a subject that you would like to present yourself.

Mathematical Prefixes

For those with a mathematical mind, did you know that:

One piece of a phone smashed into a million pieces is a micro-phone? (1e-6).

That a million million (1e12) bulls is a tera-bull?

One tenth (1e-1) of your mate is deci-mate? or that 10 (1e1) cards are a deca-cards?

Well, now you do!

73 TILL NEXT TIME, PHIL.

VK2 NOTES

TIM MILLS VK2ZTM

Annual General Meeting

The 1990 AGM of the NSW Division was held at Amateur Radio House on Saturday afternoon, April 28th. Attendance was over 40. Merit certificates were awarded to Steve VK2PS and Alan VK2XAT for service to the

Divisional Broadcasts.

The Returning Officer declared the following as the new Council for 1990/91: Reg Brook VK2AI, Glen English VK2JPR, Roger Henley VK2ZIG, Dave Horsfall VK2KFU, John Martin VK2EJM, Tim Mills VK2ZTM and Terry Ryeland VK2UX. The Returning Officer for 1990/91 is Peter O'Connell VK2EMU.

The Special Resolution to extend the number of Divisional Councillors from seven to nine, and to alter the timing for notification of the Annual General Meeting, was passed unanimously. The motions to abolish the conference of clubs and replace it with regional conferences were passed after much discussion. The motion to set associate membership fee at a discount to full membership was passed after much discussion.

Finally, there was general discussion from the floor on several topics. Following many recent changes to the Divisional Memorandum and Articles of Association, it is intended to publish an amended version of same. Stocks of the present articles (3rd edition) are low, and a general reprint will be undertaken during the coming year. The NSW WICEN co-ordinator, Steve, VK2DNN, spoke at length on the benefits of joining WICEN, with particular emphasis on personal insurance of those amateurs assisting in disaster recovery etc. There was some discussion on section 6(e) of DOC-71 and a clarification was sought. Amateur devolvement was discussed, and it was noted that over 300 on-the-spot fines were issued by DoTC in the past year, totalling over $20,000.

After the AGM, the new council met to allocate major portfolios. These notes were prepared before the first general council meeting and the full listing of office bearers will be in next month's notes. President for this year will be Roger Henley, VK2ZIG.

Examinations

Last month (May) was when many groups, including the Division, conducted their first licence exams. Would all groups keep the Divisional office informed with their exam schedules.This, in turn, will enable the Division to direct enquiries.

Video Tape Library

New tapes have recently been added to the Division's video library at Parramatta. These may be borrowed by members and clubs. Format VHS, a Beta copy can be arranged on some titles. From last year's "Satellite Seminar" with Graham VK5AGR, three tapes (eight hours' running time). "How to Survive in a Dog Pile" by John VK2DEJ, on a single tape. "HF DX Seminar" with Iris and Lloyd Colvin, and "Making Friends on DX" by Syd VK2SG on another tape. From the Federal video library a tape on "Quartz Crystals" by Clem VK5GL and "Introducing Microwaves" by Des VK5ZO has also been added. The Division has sent tapes of the locally produced material, as above, to the Federal Tape Library. Anybody requiring copies should check conditions and requirements detailed on page 31 of February 1990 'Amateur Radio'.

VK2WI — Dural

A separate transmission unit has been obtained and installed on our 30-metre broadcast frequency of 10125 kHz. Similar power to the previous transmitter, which has now been returned to 80-metre duty. The return of the winter months has enabled the starting up again of the morning 80-metre AM transmission. it is time to compile the roster July to September. If you can assist, contact Steve VK2KXX direct or via the office.

Oxley Region Field Day

The June holiday weekend 9/10th is the time for this annual event at Port Macquarie. Details have been on the broadcast. contact with the club at PO Box 712, Port Macquarie, NSW 2444. *(See details in Club Corner - Ed)*

QSL Bureau

The VK2 Bureau, operated on behalf of the Division by the Westlakes ARC at Teralba, Newcastle, had a computer breakdown a couple of months ago, which slowed down card processing. It is hoped that the backlog has been cleared. A note on postage costs. Last January Australia Post changed a few rates, so you would be well advised to obtain a chart of charges from your local post office so you can watch both weight and thickness when sending your outwards cards.

Education

Positions vacant. Educational Liaison Officer, Terry VK2UX, advises that there are several positions vacant within the Divisional structure. Terry is now Federal Councillor and has a little less time. He requires an Education Officer, an Education Committee and a Correspondence Course Supervisor. Further details from the office.

ATV

A recent meeting of interested persons on future directions for Amateur Television within NSW resulted in an advisory committee with Peter VK2ABH as Chairman.

WICEN (NSW) Inc

A co-ordinators' conference was held at the end of April at the Central Coast VRA base at Wyong. Several co-ordinators were able to make it together with Leigh VK3TP from Vic WICEN. A detailed report in the next WICEN newsletter being sent out during this month. Recently, all WICEN members were posted an audio cassette on 'Voice Procedure' together with a multi-choice test paper. Copies of this tape may be obtained by other WICEN groups. WICEN (NSW) Inc postal address is PO Box 123 St Leonards NSW 2065, or phone messages via the Division (02) 689 2417 or fax on (02)633 1525.A note to interstate groups that VK2 has stocks of WICEN cloth badges should they require same.

Forthcoming WICEN exercises include: Central Coast, St Albans horse ride June 24th, Upper Hunter, Scone 200 over July 4 to 6th Sydney, City to Surf Sunday 12th August.

Central West and Sydney sections were activated for 24 hours on April 24th to provide backup to police during the Nyngan flood evacuation. HF, linked VHF/UFH voice and packet nets were established.

The renewal of WICEN membership becomes due 1st July for the period to 30/6/91. Renewals and new memberships welcomed. The annual dues are $5.00. By now, your local club should have some WICEN information, together with application forms, so perhaps enquire at your next meeting. Check with your local co-ordinator whether your groups collects due locally, and sends a single cheque to the WICEN treasurer. It makes his job easier.

New Members

A warm welcome is extended to the following who became members of the VK2 Division during April.

AD Austin	VK2ADA	Woolgoolgah
A S Barr	VK2EGB	Campsie
P J Buckman	VK2FTJ	Boggabri
T J Eastley	VK2KVT	Kingswood
R J Dellosta	VK2NJD	Beacon Hill
G J French	VK2AJI	Narooma
K R Golden	VK2DGT	Coffs Harbour
J M Milson	VK2MBM	Ruse
DW Olley	3D2DW	Fiji
R E Patterson	VE1VAE	Canada
C W Perry	VK2EO	Lindfield
S J Pollard	Assoc	Granville
J J Rowe	VK2JJR	Cabramatta
M J Savins	VK2DMS	Toormina
G J Sully	Assoc	Richmond
K F Turk	VK2PKT	Lakemba
G Williams	Assoc	Epping

Your Membership Card

Did you remember to cut it from the back cover of the Annual Report???

5/8 WAVE

JENNIFER WARRINGTON VK5ANW

Now Let's Get This Right!

Just forget all the previous information I have given you about Buy and Sell nights and, after this, you will be as confused as I am! Council has had a re-think about the policy for Buy and Sell nights. From the April meeting (and I'm sorry, but the May copy had already

Peter Koen (State JOTA Co-ordinator) pictured with Don McDonald VK5ADD (the then VK5 President) at the VK5 Clubs Convention 1990.

gone in before the change-back) where there are five Tuesdays in the month, the fourth Tuesday will be a General Meeting night with a speaker, and the fifth Tuesday will again be a General Buy and Sell. When a Deceased Estate arises,it will be on a fourth Tuesday instead of a Speaker. (And they say women change their minds!)

New Council Members for 1990

Well, there weren't any. Not only did we not get enough volunteers to need an election, we didn't get enough to fill the vacancies left by retiring members. Those retiring, besides myself, were Alan Mallabone VK5NNM (due to work and family pressures) and Ben Broadbent VK5ABE (due to study and family commitments). Ben hopes to return in a couple of years and his talents will be put to good use when he does. Alan has made a considerable contribution during the past few years that he has been on Council, and many new members have been directly attributable to Alan. We thank them both for their contribution and hope to see both of them back again one of these days.

At the time of writing, only the following positions have been filled:

President	Rowland Bruce VK5OU
Secretary	John McKellar VK5BJM
Treasurer	Bill Wardrop VK5AWM
Past President	Don McDonald VK5ADD
WICEN Director	Ian Watson VK5KIA

Other members to date are: Peter Maddern VK5PRM, Bob Allan VK5BJA and Hans Van Der Zalm VK5KHZ.

Finally, best of luck to the VK5 Foxhunters going to the SERG Convention this month. **ar**

CLUB CORNER

Bayside District Amateur Radio Society (VK4)

Bayside District Amateur Radio Society (Inc) meetings are held on the first Monday of each month at 1930 local time at Alexandra Hills High School library, followed by light refreshments.

Club call VK4BAR is heard on Monday at 2000 local time on the Mt Cotton repeater (147.675 MHz) and again Wednesday at 2000 local time one 28.300 MHz.

The society is also conducting amateur radio exams and beginners classes.

For further enquiries phone (07) 824 1518, Ian Campbell VK4TK.

The Society is presenting a display in the Albert Morris pavilion at the Redlands Show, Long St, Cleveland on 29th and 30th June, and 1st July 1990. Everyone is welcome to attend.

Oxley Region's Annual Field Days Weekend — Port Macquarie

It's on again for 1990! Port Macquarie, the nerve centre of the Oxley Region Amateur Radio Club, will see the annual gathering of amateurs from near and far on the Queen's Birthday weekend. The venue will be on the premises of the Tacking Point Surf Life Saving Club on Matthew Flinders Drive, Lighthouse Beach, Port Macquarie.

The two-day event begins with registration at 10.00am on Saturday 9th June 1990 and continues until Sunday 10th June. (Registration for Sunday's activities begins at 9.00am on Sunday for those who are attending on that day only).

There will be the usual comprehensive program of events which comprises a range of fox hunts, amateur-related contests, surplus gear sale booth, WIA bookstall, activities for the XYLs, YLs and family members.

Coffee, tea and bickies will be on tap, free! And an inexpensive hot-food smorgasbord will be a social highlight at 6.00pm on the Saturday evening. Snacks for other meals will be on sale at the venue at reasonable prices.

This notification missed the May issue due, unfortunately, to the injury and subsequent hospitalisation of our club's publicity officer, Lewis (VK2LS). Amateurs, their friends and interested non-amateurs who wish to have further information regarding this always-enjoyable event may direct enquiries to the secretary (Trevor, VK2TT, 065 85.2278), or the president (Allan, VK2ALI, 065. 83.3312). Written requests should be directed to The Secretary, ORARC, PO Box 712, Port Macquarie). **ar**

Morseword No 39

Solution on page 56

Across

1 Platform
2 Filch
3 Women's ____
4 Flame
5 Male deer
6 Holy man
7 Bantu Warriors
8 Moves
9 Scot's garment
10 Sight

Down

1 Joint
2 Skin
3 Small state!
4 Superhuman
5 Genuine
6 Blend
7 Cooker
8 Acts
9 Listen
10 Floats

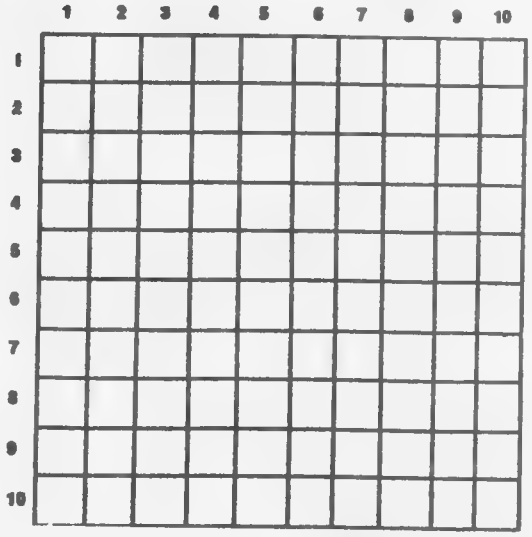

Audrey Ryan © 1990

QSLs FROM THE WIA COLLECTION (23)

KEN MATCHETT VK3TL HON CURATOR WIA QSL COLLECTION
PO BOX 1 SEVILLE VIC 3139

Libya – North African Battleground

Because of its geographical position bordering the Mediterranean, Libya (or to give it its full name, The Libyan Arab Republic), has been the scene of battle for centuries. The name Libya was given by the early Greeks in those days to a large area of North Africa which included Egypt and even Ethiopia. Today the country has an area approximating to that of Queensland, and is bounded by Algeria and Tunisia to the west, Egypt to the east and three countries to its south namely, Niger, Tchad and Sudan.

The country originally had three provinces, two of which are associated with pre-WW 2 amateur radio. These are Tripolitania to the west and Cyrenaica to the east. The third province was Fezzan to the south.

Nearly 2500 years ago there were invasions by the Persians, followed by the Romans when Libya became a wealthy centre of Roman civilization. In later years, the Vandals, Arabs, Spaniards and Turks have all had a hand in its occupation. The modern history of Libya however, starts just before World War 1 when, in 1911, Italy declared war on the country but managed to retain it after the armistice. Even in relatively recent times, Libya has been the scene of battle, not the least memorable being the North African campaign of the early 1940s.

MD2AC

As can be seen from the QSL card, this originates from Tripoli (not to be confused with the city of the same name in Lebanon). Tripoli is both the main city and port of the western province of Tripolitania.In 1940 Italian forces under the command of Marshal Graziani had started their western march to the Egyptian border where they were opposed by the Western Desert Force (eventually to form the British Eighth Army). When in early 1941 Germany decided to come to the rescue of its Italian ally, it was at the port of Tripoli in Libya that the German commander, General Erwin Rommel landed with his Axis forces. It was also at Tripoli that Field Marshal Montgomery finally completed the conquest of the former Italian empire in North Africa.

The years 1943-49 saw the British administration of Tripolitania and Cyrenaica. (The French administered the southern province of Fezzan). After the war, both American and English personnel activated these two provinces using prefixes commencing with the letter M. These were not quite official prefixes. They were "official" in the sense that they were allocated by MEF (Middle East Forces) authorities but were not part of the official international Telecommunications Union prefix allocation to member countries. Nevertheless, they appear in ARRL countries lists of the day. Their use gave rise to considerable confusion just after the war, so much so that QST (in its May, 1948 issue) had to say "These MEF calls are getting more complicated day by day ... We had better go down the list to straighten things out as follows: For military personnel ... Cyrenaica MD1; Tripolitania, MD2. ... Special civilian prefixes Cyrenaica MC1, Tripolitania MT2". Contacts using such prefixes were quite acceptable for DXCC purposes. Of course, Old Timers will realise that the M (military—or more precisely, occupation personnel prefixes) for Libya were amongst several used shortly after the war, especially during the period 1946-1952. Amongst others were those used in Austria (MB9) Eritrea (MD3) Egypt (MD5) Trieste (MF2) to name a few. Most were fairly quickly replaced as ITU allocations were made, but some like MP4 (Bahrein) seemed to have hung around for years.

The MD2AC card was sent through the US Army Postal Service, but the WIA QSL collection has also MD2 cards from RAF personnel (MD2GO) and other British operators (MD2PJ, MD2KP, MD2DW).

The MD2AC card is dated July, 1949 and was for a QSO with Len Moncur, VK3LN of Ascot Vale, Victoria.

LI2JC

One has only to read the issues of QST during 1937 to see that the ARRL was having real trouble in arriving at what could be described as a "List of Countries" for DXCC purposes, admitting (in QST Jan 1937) that the task was not as simple as at first thought, and that it had to "boil the list down to a reasonable figure (a reasonable figure being about a couple of hundred)". It is quite possible that there was no amateur radio activity out of Libya before the second world war, although it must be said that the country itself was listed, albeit without any accompanying prefix. The only possibility may have been the use of the I prefix that had been allocated to Italy "and its colonies".

The first listed prefix for Libya was one that appeared early after the war. It was LI2. The choice of prefix by the occupation forces personnel probably followed the early practice of allocating country prefixes by using letter abbreviations. The LI prefix was not infrequently in parenthesis thus indicating there existed some doubt in ARRL circles that it was authentic. The LI2JC QSL shown in one of two LI cards in the Collection. It originated from the RAF base of El Adem, Tobruk. This prefix was later changed to MD1 (not MD2 as might have been expected, the reason being that these calls originated from Cyrenaica and not Tripolitania). The name Tobruk of course, will always remain in the annals of history as the scene of the heroic resistance of the Australian 9th Division against the might of the German Afrika Korps.

The QSLs of MD1A, MD1D AND MD1BA (all from Cyrenaica) are also in the Collection. As mentioned above, special prefixes for civilian use were also issued ... Cyrenaica MC1 and Tripolitania MT2. The Collection is fortunate in having the rather rare QSL MC1A (Cable and Wireless, Benghazi) and the somewhat unusual QSL (Official?) of T1NS sent by a member of the MEF (RAF) in Tripoli and dated as early as Dec 1946. This is a printed

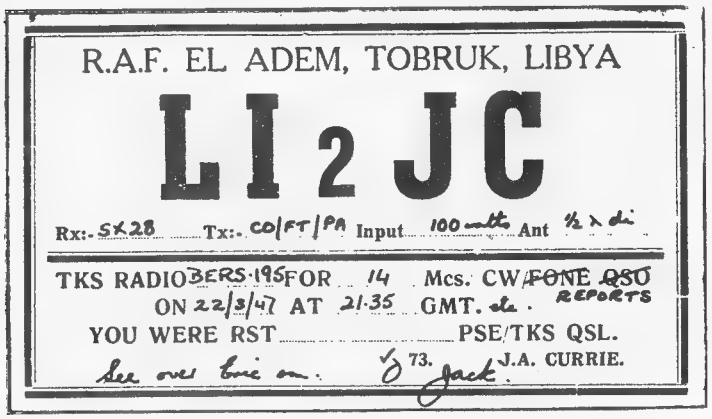
R.A.F. EL ADEM, TOBRUK, LIBYA
LI2JC
Rx:- SX28 Tx:- CO/FT/PA Input 100 watts Ant ½ λ di
TKS RADIOBERS 195 FOR 14 Mcs. CW ~~FONE QSO~~ REPORTS
ON 22/3/47 AT 21.35 GMT. de
YOU WERE RST PSE/TKS QSL.
See over time on. 73. Jack. J.A. CURRIE.

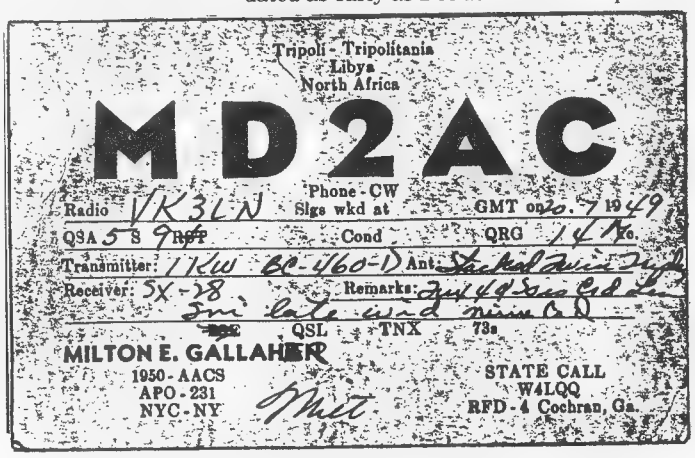
Tripoli - Tripolitania
Libya
North Africa
MD2AC
Radio VK3LN Phone - CW Sigs wkd at GMT on 20.7.1949
QSA 5 S 9 Cond QRG 14 Mc.
Transmitter: 17 KW BC-460-D Ant:
Receiver: SX-28 Remarks:
QSL TNX 73s
MILTON E. GALLAHER
1950 - AACS
APO - 231
NYC - NY
STATE CALL
W4LQQ
RFD - 4 Cochran, Ga.

QSL and undoubtedly one of the first to be sent out of the country after the war, probably before the MEF issue of the MD prefixes.

From the front of the LI2JC card we read that the originator, Jack Currie was using a SX28 receiver. This was probably the most famous member of the Hallicrafter SX series of receivers, and was very popular just before the war. It was a 6 band, 15 valve set covering a frequency range from 550 kHz right up to 43 MHz. In 1941 it sold for just under $160 (US). His transmitter was in all probability, "home-brew" (as were most of the rigs at that time). The CO/FT/PA stages of the transmitter (as shown on the QSL) stood for Crystal Oscillator/Frequency Tripler/Power Amplifier.

5A2CV

After WW2 the three provinces of Libya federated and the country was declared independent by the United Nations Organization. In 1963 a unitary State was formed and the provinces as such abolished, but it was 1969 that saw the greatest political change in the country. This was Colonel Gaddafi's army coup occurring late in that year, which action led to the withdrawal of all foreign forces from the country. However before this event, and as early as 1952 the new prefix ITU allocation of 5A (from the block 5AA-5AZ) had been made, Cyrenaica using 5A2C and Tripolitania, 5A2T. (There was no allocation to Fezzan). By far the most common 5A prefix allocation is 5A2T since much of the Libyan population is centred around Tripoli. The

prefix 5A2 was the only one used for some years but now the WIA collection contains prefixes 5A1 to 5A5 inclusive and even a 5A0 (issued to a Polish visitor in 1987).

The pictorial QSL 5A2CV shown resulted from a QSO in Jan 1959 between a RAF Amateur Club member stationed in Tobruk and Gerry Butler, formerly VK3GB now residing at Redcliffe, Queensland.

Thanks

The Wireless Institute of Australia would like to express its thanks to the following for their contribution of QSL cards towards the Collection:

(Supplementary List)
Fred, VK3CFK
Harvey, VK3AHU
Frank, VK2QL
Ray, VK3RF

Also to the friends and families of the following "silent keys" (Supplementary List"
Jack Gerard, VK2ADN
Noel Ericsson, VK2MF.

If you would like to play a part in building up the WIA QSL collection and to save something for the future, would you please send a half-dozen (more if you can spare them) QSLs which you feel would really help the collection along. All cards are appreciated but we especially need commemorative QSLs, special event stations QSLs, especially assigned call QSLs (eg VK4RAN), pre-war QSLs, unusual prefixes, rare dx and pictorial QSLs of not so common countries. Could you help? Send to PO Box 1, Seville 3139 or phone (059) 643 721 for card pick-up or consignment arrangements for larger quantities of cards.

The 1990 DX QSL Contributor's Ladder:

Frank,	VK2QL	163 points
Jim,	VK9NS	158
Ray,	VK3RF	37
Austin,	VK5WO	30
Bruce,	VK3BM	13
Barry,	VK5BS	12
Snow,	VK3MR	9
Vic,	VK5AGX	8

Special QSLs received:
From VK5WO: CR8AC (Goa)
VK3RF:- Prefixes T26 (Tuvalu)
8P7, 8P8 (Barbados) P41 (Neth.Ant.)
J88 (St Vincent)
Special Calls:-
IQ8RAI, CP1AA, SP0PCL.

ar

SILENT KEYS

DUE TO INCREASING DEMANDS ON SPACE WE REGRET THAT AS FROM JULY WE MUST IMPOSE A 200 WORD LIMIT ON OBITUARIES

We regret to announce the recent passing of:-

Mr Herbert Chappel	VK2PYN
Dr WAS Butement	VK3AD
Dr AG Moritz	VK3ZHU
Mr PD Thomas	VK5ZPT
Mr Frank Anzalone	W1WY

William Butement VK3AD

William Alan Stewart Butement, Australia's first chief scientist in defence, died on January 25, aged 85, in Melbourne.

Born in New Zealand, he was educated at Scots College in Sydney and University College School at Hampstead, England. After completing a Bachelor of Science at the school, he worked in the British War Office's Signals Experimental Establishment at Woolwich, London.

Dr Butement was an early researcher in the field of radar and is credited with developing the first searchlight radar.

In 1946, Lieutenant-General Sir John Evetts recruited him as Deputy Chief Scientific Officer of a team which came to Australia to investigate a site that became the Woomera rocket range.

He was appointed the Australian Department of Supply's Chief Scientist and was responsible for the newly created Australian Defence Scientific Service. The service was later developed into the Defence Science Technology Organisation.

In 1967, he left the service to take up a five-year term as executive director of research at Plessey Pacific Pty Ltd.

He was made a Commander of the British Empire in 1959 and awarded a Doctor of Science by Adelaide University in 1961.

Reprinted from Canberra Times 28/2/90

Alan Moritz VK3ZHU

I regret to advise that Dr A.G. Moritz VK3ZHU became a Silent Key on April 4 last.

Alan was a Senior Research Scientist at the Materials Research Laboratory, Maribyrnong where his main disciplines were Mass Spectrometry and Nuclear Magnetic Resonance Spectrometry.

He was widely known in the scientific community.

He was known by most of the radio amateurs who passed through the Laboratory over the years - also to many VHF-ers in VK3 and VK5 (which was his home state).

With VK3ATY he held the 2.3 GHZ record for some years.

Alan also contributed technical particulars to AR and would have been known to the Editorial Staff.

Alan leaves a wife (Margaret), two sons (Andrew and Jonathan) and a daughter (Karen).

IAN BERWICK VK3ALZ.

Frank Anzalone W1WY

On 30 December 1989 Frank, who had just turned 87, lost his struggle with cancer after a long and arduous battle. He loved amateur radio, but would be the first to admit that contesting was his special passion. Frank was originally licensed as W2WC in Brooklyn, New York in 1922, and he enjoyed a 43-year career as Chief Radio Engineer for WHN Radio in New York City.

Frank's greatest contribution to the contest world was through his role as Director of the CQ World-Wide DX Contest, spanning a period of more than 40 years.

Ken O'Farrell VK4OF

This obituary is in remembrance of Ken O'Farrell VK4OF who passed away in June 1989 aged 64, from illness since retirement. It is with deep regret and sadness that we remember his passing.

Ken served his apprenticeship as a fitter with the Queensland Government Railways, and moved on to obtain his Marine Engineers Certificates. He served some time on tankers before joining the Main Roads Department in Townsville where he met his wife Mary. From Townsville he moved to Brisbane commencing a long and distinguished career in the electrical industry. Ken worked at New Farm, Bulimba, Swanbank and Gladstone Power Stations, with the greater part of his 30 odd years in the industry as a Shift Engineer or Shift Supervisor.

In Brisbane Ken attended Army radio theory classes in the early 1960s. He gained his licence and callsign VK4OF and became an avid DXer, using a quad antenna to work the world on HF. He became heavily involved with the WIAQ and printed QTC for some time, at home using a Gestetner. Ken has had some fantastic contacts on HF, for example, he worked King Hussein of Jordan. During an earthquake in Alaska in the 1960s Ken relayed messages between an American warship and an amateur in Anchorage initially establishing the only communication between Alaska and the outside world. The warship was on its way to Alaska but propagation prevented direct communication so Ken did all the message relaying on CW until the warship finally established direct communication. When the La Balsa raft expedition was in progress, Ken helped relay messages from the raft crew back to Ecuador. During a later exchange on behalf of the crew, Ken received a personal thankyou over the air from the then President of Ecuador. He later received a signed thankyou certificate from the President. While convalescent after a heart attack in 1985 Ken worked the Butternut Antenna Factory in the USA. Using his Butternut antenna he worked a stateside ham, also using a Butternut. The latter telephoned Butternut, told them the situation, and the factory fired up their station for a 3 way QSO. These are just some examples of the unusual and interesting incidents which seemed follow Ken throughout his life.

He experienced many dangerous and amusing incidents over the years especially from travels in Russia and India, but no matter how dangerous the situation, Ken could always turn it into a humorous story. Even though not heavily involved in Amateur Radio during the last few years he maintained an interest with the recent purchase of a 2 metre hand held, and a solid state HF set. He wanted to go solo sailing when he retired and these rigs were to take pride of place in the vessel.

Ken was a member of the Gladstone Amateur Radio Club from its formation in 1980. To those who knew him personally he always helped with questions on radio, of which his knowledge was extensive.

Some will remember Ken as a workmate, some will remember him as a friend, some will remember him as a good fist or strong voice on air using impeccable procedure. As well as the above I will remember Ken as a person full of life, with a lot of courage, and a person who had done almost everything and has enjoyed every minute of it. Ken is survived by his wife Mary, daughter Linda, sons Tony and Joel and grandchildren.

(Compiled by Nigel VK4AV on behalf of the members of the Gladstone Amateur Radio Club. Special thanks to Peter VK4PJ and Allan VK4SS.) **ar**

OVER TO YOU

ALL LETTERS FROM MEMBERS WILL BE CONSIDERED FOR PUBLICATION AND IN FUTURE MUST BE LESS THAN 200 WORDS.
THE WIA ACCEPTS NO RESPONSIBILITY FOR OPINIONS EXPRESSED BY CORRESPONDENTS.

Packet Trading

In his response to John Woodings' letter, John Day refers to AAPRA along with other non-commercial organisations such as the WIA and the Melbourne Packet Radio Group as competition. Comments such as those reveal a lack of understanding of the situation.

When Amateur Packet Radio first appeared, there were no commercial units available. AAPRA, like SADCG, imported boards and helped the amateur community make its own packet systems. We found it cheaper to buy Paccomm units than to build our own with local components. We are not and never have been interested in making money for AAPRA itself. We were and are people who are interested in packet as one medium for communication, and clearly you can't communicate unless there is someone out there with suitable equipment. So we set out to help Australian amateurs get on the air with packet. Magic is unreliable!

Essential to the use of packet is establishment of a digipeater network, for which AAPRA has more or less given the necessary equipment to interested clubs. To date we have given away well over $6,000 of gear. This money came from our "commercial" activities. We have imported and sold Paccomm TNCs, and were very fortunate to have a software TNC emulation program for the Commodore 64 written for us by Chris Mills. This, combined with a simple modem which has been developed into the present C=PAK and BEEPAK duel-port modems (the latter for use with Gerard Hill's Microbee software) has enabled about 360 amateurs to become involved in packet at minimal cost. Provision of these units and documentation (we have sole distribution rights for the software) and distribution of information has been done by a few volunteers, so that our overheads are very low. This enabled us to fund much of the development of packet in Australia with the help of our subscribers.

Without this effort, the demand for commercial packet gear would not have grown to its present level, and it seems that the growth will increase. We are not in competition with the trade, we are stimulating it!

At this point it is appropriate to add that AAPRA has no control over the evolution of the packet system. If, as it appears, there are some amateurs who want a network that will support 4,800 Baud or more, using TC/PIP or other protocols, there is nothing to stop them doing so if they are able to provide the equipment. AAPRA is only concerned with the network we have developed, which caters for the more modest capabilities of, for example, the C-64. The ROSE network is improving rapidly as more clubs are installing nodes, and the effect in reducing traffic congestion is amazing.

Such an improvement in the amateur radio environment has been gained by the voluntary work of a very small number of hard-working enthusiasts, and it is typical of the community that those who whinge the most are the ones who do nothing. We appreciate the help the amateur community gets from various members of the trade, but wish something could be done to promote a combined effort and not the silly growth of factions within our common interests.

As for the statement that we now have a "commercial imperative" and can't fulfil our role of supplying impartial service and advice, has John Day ever asked our advice? He would even find that we have referred enquirers to his firm. We also encourage people to use 'Digicom' rather than C=PAK if they feel 'Digicom' has facilities to offer that suit them better than the different facilities we can offer. It just happens that a product that satisfies the market best is the one that is bought; many factors affect this, price is not the only one. Our existence may help keep the prices of some commercial units reasonable (our prices were deliberately placed at a level that was compatible with possible commercial exploitation) and in that sense we may be "competition". But don't you agree that we built the market in the first place?And that

we have returned all the results of our work to the community. Traders do not do that (no one expects them to). Without the efforts of AAPRA and similar groups, the trade would probably still be depending on the sales of Morse keys!

Finally, AAPRA is busy fulfilling its aim to establish packet radio in the Australian amateur community, for those who are neither rich nor geniuses. None of us intends to slave away forever. The only thing in it for us as individuals is the satisfaction of doing something worthwhile, and success in occupying our spare time! We don't want to compete . . . any takeover is welcome, as long as it preserves our members' interests.

I have no doubt that the other "competitors" will tell the same story.

JOHN JEFFERYS VK2CFJ
HON SEC
AUSTRALIA AMATEUR PACKET RADIO ASSOCIATION
59 WESTBROOK AVE WAHROONGA 2076

Conflicting Clocks

When two measuring devices disagree, the user has to decide which one is accurate. So when the atomic clock and the dynamical clock (period of the earth's orbit) were found to differ, M Leiba, in the March 'AR' article on the Leap Second, considered that it was the dynamical clock that was varying and that the atomic clock was constant.

Gravitational processes govern dynamical time, which can only vary if energy conservation laws are violated. Electromagnetic processes govern atomic time. Norman and Setterfield of the Flinders University in South Australia showed in 1987 that the rate of atomic processes is not constant (1).

Light is produced by atomic processes and its velocity, c, has been measured since the 17th century. During the 300 years before 1985, c decayed non-linearly by some 1,500 km/sec or approximately 0.5 per cent. The plotted values show an exponentially damped sinusoid. Its rate of change then approached zero, and c now appears to be increasing slightly, behaviour consistent with an exponentially damped decay curve.

So, whilst all atomic clocks tick in unison, their rate is not constant. Thus the Leap Second is required to correct atomic time, not dynamical time.

(1) The Atomic Constants, Light and Time, by T Norman and B Setterfield, published by Stanford Research Institute International, California, 1987. ISBN 0-7258-0363-0.

JIM JENNISON VK2PU
ILLOURA
EAST-WEST RD
VALLA 2448

(This may already be a cat among some of the physics pigeons! Ed)

Income and Upgrading

Permit a "Yes, but . . ." (from one whose LAOCP is far enough to go considering available income) to the letter by Lindsay VK3ANJ, in May 'AR'.

His letter appears to presuppose that available income can finance a wide range of interests — HF, VHF, UHF, SHF.

And, having built or bought the gear, time is there to use it all!

As an invalid pensioner, demands on my time probably limit me to about eight hours a week, mostly during daylight! Mostly on weekdays!

IAN CROMPTON VK5KIC
9 CRAIG ST, RICHMOND, 5033

Wireless in the 1914/18 War

I read with much interest the articles in the April '90 issue headed "The Last Wireless ANZAC" and "Wireless in the 1914/18 War".

Of special significance to me was the discovery of my late father's photograph on page 34, shown as a member of the Wireless Squadron of the Australian Light Horse.

I recall how, in my youth, my father used to send Morse code to me at the dinner table, using the blade of a knife in the tines of a fork, brass sounder style. It is not surprising, therefore, that I also served in wireless units in AIF Signals in World War II.

As some of your members may be trying to identify other squadron members in the photograph, it appears that the third row should read from right to left, as my father is second from the right.

I look forward to further articles on the historical background and foundations of radio communication which binds so many of us together.

W J PAUL VK2EXX
12 BILLABONG AVE
TURRAMURRA 2074

Approved Procedures

Referring to recent correspondence about operating procedures, the information in DOC72 is sufficient for most amateur radiocommunications but, for those wanting to improve their vocabulary and their technique, I suggest referring to the BTI (maritime) "Handbook for Radio Operators". The library catalogue number is 623 89 32. The following extracts refer to recent debates.

Acknowledgment of receipt by the operator:

Telegraphy — the letter R sent once-K

Telephony — "Your message received" — "Over" or "ROMEO your message" — "KILO" or simply "ROMEO" — "KILO".

The abbreviation QSL is better reserved for a request for acknowledgment from the addressee — if operator acknowledgment is not sufficient.

The Q code and other telegraphy abbreviations can be used in telephony where there are language difficulties; in other circumstances these should not be used. When used, the correct form is:

Request — QSL ROMEO QUEBEC (RQ)

Response — QSL BRAVO QUEBEC (BQ)

Some responses which could be used by amateurs are:

Where the answer is affirmative, say — "YES"

Where the answer is negative, say — "NO"

Where information is not immediately available, but soon will be, say — "STANDBY"

Where information cannot be obtained, say — "NO INFORMATION"

Where a message is not properly heard, say — "SAY AGAIN"

Where a message is not understood, say — "MESSAGE NOT UNDERSTOOD"

If any part of a message needs safeguarding, use the word "repeat", eg "Change to channel 6800, repeat 6800".

Numbers should be spoken thus — six eight zero zero for 6800.

We are not professionals, but it is worthwhile following their example, particularly when accuracy is important.

LINDSAY LAWLESS VK3ANJ
BOX 112
LAKES ENTRANCE 3909

Dinkum Persuasion

Referring to my letter and your footnote in April 'AR' —

Yes, CW DX is not the only achievement pinnacle, it is one of many. CW is a pinnacle to be conquered to enable us to serve the international community which authorises our existence. One is also happier to know oneself competent to cope with any amateur communication situation, and also able to assist beginners.

One ITU objective is to make affordable telecommunications available to all, including the amateur radiocommunication service. Many amateurs out there, with simple CW rigs, look for encouraging contacts with Australian amateurs.The only excuse for incapability is total inability to master Morse. Others should be able to spare a little time to talk on CW. Rag chewing on 80 or the local repeater breeds parochialism and does nothing for international goodwill.

Regarding persuaders; aren't we all? WIA management persuades us that the institute is entitled to a fair go from non-members. I try to persuade management that we need policy changes to attract more members. The following statistics are from recent issues of AR.

There are 18,372 licensed amateurs; 7,619 (41 per cent) are WIA members; 10,714 (58 per cent) are unrestricted licensees; 10,753 licensees are not persuaded that WIA membership is worthwhile; *many doubt they will get a fair go*. We have persuaded the authorities to allow lower entry qualifications, producing an all-time low proportion of unre-

stricted licensees.

Should we concentrate less on persuasion and more on providing real needs and quality services? Persuasion will not compensate for inferior performance.

Regarding tolerance — I cannot tolerate those members who, with weak excuses, will not upgrade their qualifications, and who lobby for lower entry qualifications. WIA policy condones that; we should, instead, provide incentives and actively encourage upgrading.

The ITU is our boss; we deserve the sack if we make no effort to improve performance.

LINDSAY LAWLESS VK3ANJ
Box 112
LAKES ENTRANCE 3909

Elusive Snake

A few weeks ago I received the following letter from a UK amateur. I can't help him, but I wonder if any AR reader may be able to help.

Greg Baker
PO Box 208
Braidwood 2622

Dear Greg,

This may sound a stupid question to ask, but have you ever come across or seen an antenna called 'The Snake'. It lies flat on the surface of the ground, hence its name.

When I was in Australia in 1986, touring around the Walgett, NSW, area with a sheep farmer, I accidentally came across one being used by a VK amateur for transmit and receive. When he said . . . "take a look at my snake in the paddock" I thought it was a leg pull! But when I did look, there it was lying in the sun: 2 x 145ft lengths of coaxial cable, flat on the surface of the ground! The snake's head was in the paddock sealed in a clear plastic box, with the two tails going back to his shack, with one tail into his antenna tuning unit on TX and RX. *(A sketch was supplied, but not reproduced here. Ed)*

Since my return I have heard a 'W' using one, but he gave no details — perhaps it was a VK import?

I have not seen anything published in Practical Wireless. Neither is there anything in my 1988 ARRL handbook or RADCOM-RSGB.

I should be grateful for any information you may have on your side.

RICHARD WILLIAMS

PS: My antenna masts came down in recent storms over here and I thought this snake idea might be better than new masts and sky wires?

Situations Vacant
ARDF — Fox Hunting — Foxteering

This is a very popular international sport. Basically it is orienteering with a radio receiving having directional capabilities.

At the JARL-sponsored foxteering convention held in Tokyo last November there were 270 entrants,including six from China, nine from South Korea and a lone American domiciled in Japan. China won the YL and Junior classes, while Japan won the senior and old-timer classes.

ARDF is conducted on 80m and 2m. Contestants leave the start on foot at five-minute intervals. As each transmitter is found they stamp their card and move to the next. The contestant with the least overall time is the winner.

During my visit to China in March 1990 I visited a "fox hunting" school near Nanjing in Jiangsu Province, which is run by the Sports Commission. Middle-school pupils go there for a year to learn fox hunting in the mornings and to attend their normal classes in the afternoons.

Australia has never competed internationally in ARDF competitions.

The Jiangsu Province Sports Commission has indicated it would be pleased to have an Australian group attend the school and receive instruction in international ARDF techniques. It is anticipated that this would be for about 10 days.

If there is any amateur interested in taking part in this training course (self financed) in mid-1991, more information can be obtained from VK4DO, QTHR.

It would be expected that participants take part in an international contest in 1992. Most likely to be held in China.

WALLY WATKINS, VK4DO
(079) 47 1036

WIA SLOW MORSE TRANSMISSIONS

VK2BWI	Nightly at 2000 local on 3550 kHz
VK2RCW	Continuous on 144.950 MHz 5 wpm, 8 wpm 12 wpm
VK3RCW	Continuous on 144.950 MHz 5 wpm, 10 wpm
VK5AWI	Nightly at 1030 UTC on 3550 kHz
VK6RAP	Nightly at 2000 local on 146.700 MHz
VK6WIA	Nightly (except Saturday) at 1200 UTC on 3.555 MHz

Rec. Ret. $82 plus P&P.

Ever baffled by World Clocks?

There is no need to be confused by a maze of foreign city names which cannot relate to their times.

The ZONE VIEW GLOBAL CLOCK* provides pictorial views of 30 Time Zones, differentiated by colour, clearly shows the time and day in each zone.

Amateurs! Now you can know at a glance who's in bed, who's having lunch, and who might be on the air.

***25cm diameter quartz movement.**

For details or orders contact:
RESEARCH ENGINEERING CO.
1319 Main Road, Eltham, Vic. Australia 3095.
Phone: (03) 439 5825

HF PREDICTIONS

ROGER HARRISON VK2ZTB

For ease of use and to accommodate space restrictions in the magazine, I have provided predictions applicable for three major regions of Australia:

VK EAST. Covers the major part of NSW and Queensland.

VK SOUTH. Covers southern-NSW, VK3, VK5 and VK7.

VK WEST. Covers the south-west of West Australia.

For each of these regions I have selected six "terminals" to major continental regions of the world, or regions of particular interest, such as Australian Antarctica (VK ANTARCTIC). Predictions for the long path to Europe are included again this month.

From time to time, I will include predictions to cover particular DXpeditions or other activities of special interest. There will be a DXpedition to Trindade during June and July for which I have run special predictions. Comments on bands, times and conditions are appended to the end of this column.

The predictions are calculated using a program known as "FTZ", for IBMs and compatibles, distributed by FT Promotions. If you want to know more about this program, call (02)818-4838.

The charts explained

These charts are different from those you see published elsewhere, and arguably more useful to the amateur fraternity as they give, effectively, the predicted signal/noise ratio for each hour and for selected bands.

The charts are organised in 24 rows, one for each hour UTC (first column on the left). Don't forget to add the appropriate number of hours for your time zone, including daylight saving where it applies. The next column give the MUF (maximum usable frequency) for each hour, followed by the field strength at the MUF, in decibels referred to 1 uV/metre (dBU). The column marked FOT gives the "optimum" frequency - the most reliable frequency for the path.

Then come five columns, one for each of five selected HF bands. The numbers in the column represent predicted field strength at each hour in decibels referred to 1 uV/metre. Here it represents "raw" signal to noise ratio as urban noise levels are typically 1-2 uV/metre, but does not take into account the advantage offered by particular transmission modes. The results are based on a transmitter power of 100 W output (except where noted later), the use of modest 3-element beams or similar, and for "median" conditions. Where the results fall below -40 dB, no output is printed.

Enhanced conditions may improve S/N ratios by 9-15 dB. The use of CW or digital transmission modes shows better results than SSB. If you've got 400 W output, you get a 6 dB improvement. Where conditions warrant it, I have include predictions for the bands below 14 MHz, deleting the upper bands.

Trindade DXpedition

As you would expect, 14 MHz via the short path will give you the best opportunity to work this region, except for VK WEST. However, while those running 100 W and a quad or small Yagi will be in there with a chance, signals won't be strong except during enhanced conditions.

For those in the VK EAST region, 20m will open abruptly around 2100 and fade out after 0100 UTC. For CW fans, you might get a chance between 0700 and 0800, too. 15m opens 2200-2400, while 10m opens weakly around 2300.

If you're in the VK SOUTH region, 20m opens abruptly at 2200 and closes an hour later. The higher bands are a washout.

For the VK WEST region, 20m provides three short time windows, but weak signals: 0600-0700, 1900 and 2300-0100 UTC. 15m is a better band with signals stronger than 20m between 0700 and 1000 UTC. On 10m, try between 0800 and 0900.

UTC	MUF	DBU	FOT	14.2	18.1	21.2	24.9	28.5
1	15.7	-17	11.2	-24	-9	-6	-7	-13
2	15.8	-22	11.4	-31	-13	-8	-8	-12
3	16.1	-24	11.7	-36	-16	-9	-8	-11
4	17.2	-23	12.1	...	-19	-11	-8	-9
5	18.4	-20	13.4	...	-21	-12	-7	-8
6	19.0	-18	13.9	...	-22	-12	-7	-7
7	19.4	-16	14.2	...	-21	-11	-6	-6
8	19.3	-13	14.2	...	-17	-9	-5	-6
9	19.5	-9	14.3	-34	-13	-6	-4	-6
10	19.5	-6	14.2	-24	-9	-5	-6	-10
11	16.8	-7	12.8	-15	-6	-5	-10	-17
12	14.8	-8	11.2	-10	-5	-8	-16	-27
13	13.2	-8	10.0	-6	-6	-12	-24	-38
14	12.3	-5	9.3	-3	-7	-16	-31	...
15	11.9	0	8.9	0	-8	-20	-38	...
16	11.5	4	8.7	2	-10	-23	...	...
17	11.4	10	8.7	4	-11	-27	...	...
18	10.1	13	7.7	0	-21	...	...	...
19	8.6	15	6.6	-10	-38	...	...	...
20	8.3	17	6.4	-12	...	...	...	...
21	11.9	18	9.2	10	-8	-25	...	...
22	17.4	14	12.9	17	13	7	-2	-14
23	17.1	4	12.1	-1	5	4	-1	-9
24	16.4	-7	11.7	-15	-4	-2	-5	-11

VK EAST — EUROPE S.P.

UTC	MUF	DBU	FOT	14.2	18.1	21.2	24.9	28.5
1	15.7	-17	11.2	-24	-9	-6	-7	-13
2	15.8	-22	11.4	-31	-13	-8	-8	-12
3	16.1	-24	11.7	-36	-16	-9	-8	-11
4	17.2	-23	12.1	...	-19	-11	-8	-9
5	18.4	-20	13.4	...	-21	-12	-7	-8
6	19.0	-18	13.9	...	-22	-12	-7	-7
7	19.4	-16	14.2	...	-21	-11	-6	-6
8	19.3	-13	14.2	...	-17	-9	-5	-6
9	19.5	-9	14.3	-34	-13	-6	-4	-6
10	19.5	-6	14.2	-24	-9	-5	-6	-10
11	16.8	-7	12.8	-15	-6	-5	-10	-17
12	14.8	-8	11.2	-10	-5	-8	-16	-27
13	13.2	-8	10.0	-6	-6	-12	-24	-38
14	12.3	-5	9.3	-3	-7	-16	-31	...
15	11.9	0	8.9	0	-8	-20	-38	...
16	11.5	4	8.7	2	-10	-23	...	...
17	11.4	10	8.7	4	-11	-27	...	...
18	10.1	13	7.7	0	-21	...	...	...
19	8.6	15	6.6	-10	-38	...	...	...
20	8.3	17	6.4	-12	...	...	...	...
21	11.9	18	9.2	10	-8	-25	...	...
22	17.4	14	12.9	17	13	7	-2	-14
23	17.1	4	12.1	-1	5	4	-1	-9
24	16.4	-7	11.7	-15	-4	-2	-5	-11

VK STH — EUROPE S.P.

UTC	MUF	DBU	FOT	14.2	18.1	21.2	24.9	28.5
1	17.0	9	11.9	7	9	5	-2	-11
2	17.1	-2	12.0	-10	-1	-1	-4	-11
3	17.4	-10	12.3	-23	-8	-5	-6	-10
4	18.8	-12	12.9	-34	-14	-7	-6	-8
5	20.0	-12	14.2	...	-18	-9	-6	-6
6	20.9	-11	14.8	...	-20	-11	-6	-6
7	21.3	-11	15.1	...	-21	-11	-6	-6
8	21.4	-11	15.2	...	-21	-11	-6	-5
9	21.5	-9	15.2	...	-19	-10	-5	-5
10	21.7	-6	15.3	-37	-15	-7	-3	-4
11	21.3	-5	15.4	-27	-10	-5	-5	-9
12	18.0	-7	13.7	-17	-7	-6	-9	-16
13	15.1	-8	11.4	-10	-6	-9	-18	-29
14	12.8	-8	9.6	-6	-8	-16	-30	...
15	11.2	-4	8.4	-4	-14	-27	...	...
16	10.4	0	7.8	-4	-19	-36	...	...
17	10.4	8	7.8	-2	-21	-40	...	...
18	10.5	13	7.9	0	-21	...	...	...
19	10.6	15	8.1	2	-19	-40	...	...
20	9.6	16	7.3	-4	-30	...	...	...
21	8.5	17	6.5	-14	...	...	...	...
22	8.3	17	6.4	-16	...	...	...	...
23	11.6	17	9.0	7	-12	-31	...	...
24	16.9	16	12.4	21	14	5	-8	-22

VK WEST — EUROPE S.P.

UTC	MUF	DBU	FOT	14.2	18.1	21.2	24.9	28.5
1	18.7	9	12.8	4	9	8	4	-2
2	17.9	10	12.3	7	10	8	3	-5
3	17.2	11	11.8	11	11	8	1	-7
4	16.4	15	11.3	15	13	8	0	-10
5	16.5	15	11.5	16	13	9	0	-10
6	16.8	15	11.7	16	14	9	1	-8
7	18.0	15	12.6	15	15	11	4	-4
8	16.9	6	12.6	6	5	1	-7	-17
9	13.5	-6	10.0	-4	-4	-9	-18	-31
10	11.0	-22	8.1	-10	-9	-14	-25	-39
11	9.3	...	6.9	-13	-12	-17	-28	...
12	8.7	...	6.4	-32	-29	-34	...	...
13	9.0	...	6.7	...	-36	-40	...	...
14	9.4	...	6.9	...	-38	...	...	...
15	9.8	...	7.3	...	-40	...	...	...
16	9.0	...	6.8	...	...	...	...	...
17	8.3	...	6.3	...	...	...	...	...
18	8.1	...	6.3	...	...	...	...	...
19	10.8	...	7.9	...	-29	-28	-34	...
20	15.9	-19	12.2	-28	-12	-9	-10	-14
21	20.2	-6	14.0	-28	-10	-4	-3	-5
22	20.1	0	13.8	-17	-3	1	1	-2
23	19.9	5	13.6	-7	3	5	3	-1
24	19.4	7	13.2	0	7	7	4	-1

VK EAST — EUROPE L.P.

UTC	MUF	DBU	FOT	14.2	18.1	21.2	24.9	28.5
1	18.7	9	12.8	4	[illegible]	8	4	-2
2	17.9	10	12.3	7	10	8	3	-5
3	17.2	11	11.8	11	11	8	1	-7
4	16.4	15	11.3	15	13	8	0	-10
5	16.5	15	11.5	16	13	9	0	-10
6	16.8	15	11.7	16	14	9	1	-8
7	18.0	15	12.6	15	15	11	4	-4
8	16.9	6	12.6	6	5	1	-7	-17
9	13.5	-6	10.0	-4	-4	-9	-18	-31
10	11.0	-22	8.1	-10	-9	-14	-25	-39
11	9.3	...	6.9	-13	-12	-17	-28	...
12	8.7	...	6.4	-32	-29	-34	...	...
13	9.0	...	6.7	...	-36	-40	...	...
14	9.4	...	6.9	...	-38	...	...	...
15	9.8	...	7.3	...	-40	...	...	...
16	9.0	...	6.8	...	...	...	...	...
17	8.3	...	6.3	...	...	...	...	...
18	8.1	...	6.3	...	...	...	...	...
19	10.8	...	7.9	...	-29	-28	-34	...
20	15.9	-19	12.2	-28	-12	-9	-10	-14
21	20.2	-6	14.0	-28	-10	-4	-3	-5
22	20.1	0	13.8	-17	-3	1	1	-2
23	19.9	5	13.6	-7	3	5	3	-1
24	19.4	7	13.2	0	7	7	4	-1

VK STH — EUROPE L.P.

UTC	MUF	DBU	FOT	14.2	18.1	21.2	24.9	28.5
1	16.9	-7	11.8	-15	-5	-3	-6	-11
2	16.2	-3	11.4	-7	-1	-2	-6	-13
3	15.6	0	11.1	-3	1	-1	-7	-16
4	15.0	2	10.7	1	2	-1	-9	-19
5	15.2	3	10.9	2	3	-1	-8	-18
6	15.4	5	11.1	4	4	0	-7	-17
7	16.4	5	11.9	3	5	2	-4	-13
8	17.5	5	12.7	2	6	4	-1	-9
9	17.9	3	13.0	-1	3	1	-4	-11
10	16.1	-6	12.0	-9	-5	-7	-13	-22
11	12.9	-18	9.5	-14	-10	-13	-21	-32
12	10.7	-33	7.9	-15	-12	-15	-24	-36
13	9.3	...	6.9	-34	-30	-35	...	...
14	9.0	...	6.6	...	...	...	...	...
15	9.1	...	6.8	...	...	...	...	...
16	9.4	...	6.9	...	...	...	...	...
17	9.6	...	7.2	...	...	...	...	...
18	8.9	...	6.7	...	...	...	...	...
19	8.2	...	6.3	...	...	...	...	...
20	8.1	...	6.2	...	...	...	...	...
21	10.0	...	7.3	...	...	...	...	...
22	13.9	-30	10.7	-28	-15	-12	-14	-19
23	18.0	-16	12.7	-33	-15	-10	-9	-12
24	17.5	-13	12.3	-26	-11	-7	-7	-10

VK WEST — EUROPE L.P.

UTC	MUF	DBU	FOT	14.2	18.1	21.2	24.9	28.5
1	10.2	-7	8.1	-4	-13	-26	...	...
2	9.7	-17	7.5	-7	-14	-25	...	...
3	9.3	-27	7.2	-9	-15	-25	...	...
4	13.5	-13	10.5	-11	-7	-10	-18	-30
5	21.8	-1	16.9	-18	-5	-1	-2	-6
6	29.2	3	22.5	-23	-5	2	4	4
7	27.8	2	20.8	-22	-4	1	3	2
8	24.7	2	18.5	-15	-1	2	2	-1
9	20.7	1	15.5	-10	-1	1	-2	-8
10	16.8	-2	12.6	-6	-1	-3	-10	-19
11	13.4	-5	10.0	-4	-4	-10	-21	-35
12	11.0	-7	8.2	-3	-9	-20	-36	...
13	9.5	-4	7.0	-4	-16	-31	...	...
14	8.9	6	6.6	-3	-21	-40	...	...
15	9.2	15	6.8	0	-20	-40	...	...
16	9.6	18	7.1	3	-17	-37	...	...
17	9.6	20	7.3	3	-18	-39	...	...
18	9.2	21	6.9	1	-22	...	...	...
19	8.5	21	6.4	-3	-28	...	...	...
20	8.3	21	6.4	-4	-29	...	...	...
21	9.8	21	7.5	5	-16	-36	...	...
22	9.1	17	7.0	0	-22	...	...	...
23	8.4	6	6.6	-6	-27	...	...	...
24	8.2	-7	6.5	-8	-25	...	...	...

VK EAST — AFRICA

UTC	MUF	DBU	FOT	14.2	18.1	21.2	24.9	28.5
1	9.7	4	7.4	-3	-21	-39	...	...
2	9.4	-5	7.2	-5	-19	-36	...	...
3	9.0	-14	7.0	-8	-21	-36	...	...
4	13.1	-6	10.2	-5	-6	-13	-25	-40
5	21.0	1	16.3	-9	0	1	-2	-8
6	27.0	3	21.6	-14	0	4	4	1
7	24.7	2	19.7	-14	-1	2	1	-2
8	21.8	1	17.3	-11	-1	1	-2	-8
9	18.5	-1	15.2	-8	-1	-2	-8	-16
10	15.3	-4	12.0	-6	-4	-8	-17	-30
11	12.3	-7	9.6	-5	-9	-17	-32	...
12	10.4	-8	8.0	-6	-16	-29	...	...
13	9.3	-6	7.2	-7	-22	-39	...	...
14	9.1	5	7.0	-6	-26	...	...	...
15	9.3	13	7.3	-4	-26	...	...	...
16	9.4	16	7.2	-2	-25	...	...	...
17	9.3	18	7.1	-2	-26	...	...	...
18	8.8	19	6.9	-6	-32	...	...	...
19	8.2	19	6.4	-10	-40	...	...	...
20	8.0	19	6.3	-12	...	...	...	...
21	9.5	19	7.2	-1	-25	...	...	...
22	8.8	19	6.8	-5	-32	...	...	...
23	8.2	15	6.4	-10	-38	...	...	...
24	8.0	7	6.3	-12	-38	...	...	...

VK STH — AFRICA

UTC	MUF	DBU	FOT	14.2	18.1	21.2	24.9	28.5
1	8.4	10	6.5	-5	-28	...	...	...
2	9.6	1	7.4	-2	-17	-34	...	...
3	14.0	3	10.5	3	-1	-8	-21	-36
4	22.7	6	17.5	1	8	7	4	-3
5	29.9	5	22.8	-9	4	8	9	7
6	32.7	5	24.6	-15	1	7	9	8
7	32.2	4	24.1	-18	-1	5	8	7
8	30.6	4	22.9	-18	-1	5	7	6
9	28.1	4	21.0	-14	0	5	6	3
10	24.9	4	18.6	-7	3	5	4	0
11	20.8	4	15.6	-1	5	4	-1	-8
12	16.9	4	12.6	3	4	-1	-10	-22
13	13.4	6	10.0	6	-1	-11	-26	...
14	11.0	11	8.2	5	-9	-25	...	...
15	9.5	16	7.0	1	-20	...	...	...
16	8.9	18	6.6	-2	-25	...	...	...
17	9.2	20	6.9	0	-23	...	...	...
18	9.6	22	7.1	3	-19	...	...	...
19	8.8	22	6.5	-1	-25	...	...	...
20	9.1	22	6.8	1	-22	...	...	...
21	8.5	22	6.5	-4	-30	...	...	...
22	8.4	22	6.5	-5	-32	...	...	...
23	9.4	22	7.1	3	-20	...	...	...
24	8.5	20	6.5	-3	-28	...	...	...

VK WEST — AFRICA

UTC	MUF	DBU	FOT	14.2	18.1	21.2	24.9	28.5
1	25.8	1	20.8	-19	-4	0	1	-1
2	25.6	0	21.0	-21	-6	-1	0	-2
3	25.6	-1	19.4	-22	-6	-2	-1	-3
4	25.8	-1	20.5	-21	-6	-1	-1	-4
5	26.1	-2	20.2	-18	-4	-1	-1	-4
6	25.4	-2	19.3	-13	-2	0	-1	-6
7	23.6	-1	18.0	-6	1	1	-3	-9
8	21.1	1	16.0	4	5	1	-7	-17
9	18.7	4	14.3	12	6	-2	-15	-29
10	16.4	6	12.5	12	1	-12	-29	...
11	14.5	7	11.0	8	-8	-23	...	...
12	13.0	7	9.9	3	-17	-36	...	...
13	12.2	8	9.2	-1	-24	...	...	...
14	11.6	9	8.9	-4	-29	...	...	...
15	11.2	9	8.5	-7	-34	...	...	...
16	10.9	9	8.3	-9	-37	...	...	...
17	9.7	9	7.4	-20	...	...	...	...
18	8.2	9	6.3	-39	...	...	...	...
19	7.9	8	6.1	...	...	...	...	...
20	11.2	9	8.5	-7	-33	...	...	...
21	17.8	4	13.8	10	3	-6	-20	-36
22	22.8	2	17.5	-1	4	3	-1	-8
23	25.8	2	20.1	-9	2	4	3	-1
24	26.5	1	21.1	-15	-2	2	2	-1

VK EAST — ASIA

UTC	MUF	DBU	FOT	14.2	18.1	21.2	24.9	28.5
1	27.6	1	22.3	-22	-5	0	2	1
2	27.0	0	22.1	-25	-7	-1	1	-1
3	26.7	0	20.3	-26	-8	-2	0	-1
4	26.9	0	22.3	-25	-7	-2	0	-1
5	27.1	1	22.4	-22	-6	0	2	0
6	27.7	1	22.0	-17	-3	2	2	0
7	27.0	0	20.4	-9	1	3	2	-2
8	24.2	1	18.3	2	6	5	0	-7
9	20.5	3	15.5	12	8	2	-8	-20
10	16.9	5	12.7	11	1	-10	-26	...
11	13 7	5	10.3	3	-14	-31	...	...
12	11.4	5	8.5	-8	-33	...	...	...
13	9.7	6	7.3	-22	...	...	...	...
14	9.0	7	6.7	-30	...	...	...	...
15	9.2	7	6.8	-28	...	...	...	...
16	9.5	7	7.1	-24	...	...	...	...
17	9.8	7	7.4	-20	...	...	...	...
18	9.0	7	6.9	-29	...	...	...	...
19	8.1	7	6.2	...	...	...	...	...
20	8.0	7	6.2	...	...	...	...	...
21	11.1	7	8.6	-10	-37	...	...	...
22	16.8	-5	13.0	-4	-6	-13	-25	-40
23	23.3	-3	17.9	-10	-2	-1	-5	-11
24	27.9	-1	21.3	-17	-3	1	1	-2

VK STH — ASIA

UTC	MUF	DBU	FOT	14.2	18.1	21.2	24.9	28.5
1	25.9	-1	19.9	-13	-2	1	0	-4
2	25.7	0	20.8	-17	-3	1	1	-2
3	25.3	0	20.8	-20	-5	0	0	-2
4	25.2	0	20.6	-21	-5	-1	0	-3
5	25.5	0	20.6	-20	-5	-1	0	-3
6	25.7	0	20.3	-17	-4	0	0	-3
7	26.1	-1	19.8	-13	-1	1	0	-4
8	24.6	-1	18.7	-7	1	2	-1	-7
9	22.5	1	17.1	2	5	3	-4	-12
10	19.6	6	14.8	18	10	2	-11	-25
11	16.9	6	12.8	14	2	-10	-28	...
12	14.3	6	10.9	7	-11	-28	...	...
13	12.4	6	9.4	-3	-26	...	...	...
14	10.9	7	8.2	-13	...	...	...	...
15	10.2	6	7.7	-20	...	...	...	...
16	10.0	6	7.6	-21	...	...	...	...
17	9.9	6	7.5	-22	...	...	...	...
18	10.0	6	7.6	-22	...	...	...	...
19	8.9	6	6.8	-35	...	...	...	...
20	7.8	5	6.0	...	...	...	...	...
21	7.5	5	5.8	...	...	...	...	...
22	10.6	-4	8.0	-17	...	...	...	...
23	16.4	-5	12.7	-4	-7	-15	-29	...
24	22.3	-3	17.2	-8	-1	-2	-6	-14

VK WEST — ASIA

UTC	MUF	DBU	FOT	14.2	18.1	21.2	24.9	28.5
1	15.1	1	12.0	2	-5	-14	-29	...
2	17.0	2	13.6	3	0	-7	-18	-32
3	18.8	2	15.0	4	3	-2	-11	-22
4	20.0	3	16.0	6	6	2	-6	-16
5	20.8	5	16.7	9	8	4	-3	-13
6	21.0	7	16.9	14	12	7	-1	-11
7	20.8	10	16.7	20	15	9	-1	-12
8	20.2	8	16.2	20	13	5	-6	-19
9	17.7	8	14.3	17	7	-3	-18	-35
10	15.1	9	12.0	12	-2	-16	-36	...
11	12.6	10	10.0	4	-16	-35	...	...
12	11.1	10	8.5	-5	-29	...	...	...
13	9.7	11	7.4	-14	...	...	...	...
14	9.4	11	7.1	-17	...	...	...	...
15	9.5	11	7.2	-15	...	...	...	...
16	9.8	11	7.4	-13	...	...	...	...
17	10.0	11	7.7	-12	-40	...	...	...
18	9.2	11	7.1	-18	...	...	...	...
19	8.5	11	6.7	-25	...	...	...	...
20	8.4	11	6.6	-27	...	...	...	...
21	10.2	10	7.9	-11	-39	...	...	...
22	11.4	9	9.0	-2	-23	...	...	...
23	12.0	3	9.5	-2	-18	-35	...	...
24	13.2	1	10.4	-1	-12	-25	...	...

VK EAST — VK ANTARCTIC

UTC	MUF	DBU	FOT	14.2	18.1	21.2	24.9	28.5
1	13.6	6	10.8	4	-8	-22	...	...
2	15.1	5	12.0	7	-2	-13	-29	...
3	16.5	5	13.2	8	2	-7	-20	-36
4	17.4	6	13.9	10	5	-3	-15	-30
5	18.0	7	14.3	12	7	0	-12	-26
6	18.3	9	14.7	16	9	1	-11	-24
7	18.1	11	14.6	19	11	2	-11	-25
8	17.7	12	14.2	20	10	1	-13	-29
9	16.9	10	13.6	18	6	-6	-22	...
10	14.3	10	11.3	10	-6	-22	...	...
11	11.6	11	9.1	-1	-25	...	...	...
12	9.9	11	7.8	-13	...	...	...	...
13	9.1	11	7.1	-21	...	...	...	...
14	9.1	11	7.0	-21	...	...	...	...
15	9.2	11	7.1	-20	...	...	...	...
16	9.2	11	7.2	-19	...	...	...	...
17	9.3	11	7.2	-19	...	...	...	...
18	8.6	11	6.7	-26	...	...	...	...
19	8.1	11	6.3	-33	...	...	...	...
20	7.8	11	6.2	-36	...	...	...	...
21	8.8	11	7.0	-24	...	...	...	...
22	9.8	11	7.8	-14	...	...	...	...
23	11.1	9	8.9	-5	-28	...	...	...
24	12.0	8	9.5	1	-17	-36	...	...

VK STH — VK ANTARCTIC

UTC	MUF	DBU	FOT	14.2	18.1	21.2	24.9	28.5
1	11.3	5	9.0	-6	-28	...	...	...
2	13.4	3	10.7	1	-13	-28	...	...
3	15.4	2	12.3	4	-4	-15	-31	...
4	17.4	3	13.9	7	2	-6	-18	-34
5	18.6	4	15.0	8	5	-1	-12	-25
6	19.6	5	15.8	11	8	2	-8	-20
7	19.9	6	16.0	13	9	3	-6	-18
8	19.7	8	15.8	16	11	4	-7	-19
9	18.9	10	15.2	20	12	3	-9	-24
10	17.8	10	14.3	19	9	-1	-15	-32
11	16.0	9	13.0	14	1	-13	-32	...
12	13.6	9	10.8	7	-12	-30	...	...
13	11.3	10	9.0	-5	-32	...	...	...
14	9.9	10	7.6	-17	...	...	...	...
15	8.8	9	6.8	-29	...	...	...	...
16	8.6	9	6.6	-31	...	...	...	...
17	8.7	9	6.6	-30	...	...	...	...
18	8.9	9	6.8	-28	...	...	...	...
19	9.0	9	7.0	-26	...	...	...	...
20	8.4	9	6.5	-35	...	...	...	...
21	7.8	9	6.1	...	...	...	...	...
22	7.6	9	6.0	...	...	...	...	...
23	9.0	9	7.0	-27	...	...	...	...
24	10.1	9	8.0	-14	...	...	...	...

VK WEST — VK ANTARCTIC

UTC	MUF	DBU	FOT	14.2	18.1	21.2	24.9	28.5
1	23.9	-8	19.8	...	-21	-12	-7	-6
2	23.1	-5	18.6	-34	-14	-7	-4	-5
3	22.5	0	18.1	-19	-5	-1	0	-3
4	22.3	6	17.8	-3	5	6	4	-1
5	22.5	11	17.9	13	14	13	8	3
6	22.5	13	17.8	21	19	15	9	1
7	22.1	9	17.0	21	17	11	3	-6
8	19.7	10	14.9	20	13	6	-5	-17
9	16.9	11	12.8	17	7	-2	-16	-32
10	14.7	12	11.1	13	1	-12	-29	...
11	13.0	12	9.8	9	-7	-22	...	...
12	12.1	12	9.1	5	-12	-29	...	...
13	11.7	7	8.9	1	-15	-31	...	...
14	11.4	-3	8.6	-5	-17	-31	...	...
15	11.2	-12	8.5	-10	-18	-29	...	...
16	10.0	-28	7.6	-16	-21	-32	...	...
17	8.6	...	6.6	-18	-23	-33	...	...
18	8.3	...	6.4	-32	-36	...	...	...
19	11.8	-38	8.8	-24	-18	-20	-28	-39
20	18.6	-19	14.4	-38	-20	-15	-15	-19
21	24.4	-11	19.4	...	-25	-16	-11	-11
22	24.6	-10	20.1	...	-28	-16	-10	-8
23	24.3	-10	19.8	...	-28	-16	-10	-8
24	24.2	-10	19.6	...	-26	-15	-9	-7

VK EAST — NTH/CENT AMERICA

UTC	MUF	DBU	FOT	14.2	18.1	21.2	24.9	28.5
1	25.2	-4	20.9	...	-19	-10	-5	-4
2	24.3	-1	19.6	-29	-10	-4	-1	-2
3	23.7	4	19.0	-12	0	3	3	1
4	23.4	9	18.7	5	10	10	8	3
5	23.6	13	18.8	17	18	16	12	6
6	23.7	11	18.6	22	19	15	8	1
7	20.8	10	15.6	21	15	9	-1	-11
8	16.9	11	12.6	17	8	-2	-16	-31
9	13.4	12	10.0	10	-4	-19	-38	...
10	10.9	13	8.1	1	-19	-39	...	...
11	9.3	13	6.9	-9	-34	...	...	...
12	8.6	13	6.4	-14	...	...	...	...
13	8.9	5	6.7	-12	-36	...	...	...
14	9.3	-8	6.9	-12	-28	...	...	...
15	9.8	-18	7.3	-13	-23	-37	...	...
16	9.0	-33	6.8	-16	-24	-36	...	...
17	8.2	...	6.3	-18	-24	-35	...	...
18	8.1	...	6.3	-34	-38	...	...	...
19	10.9	...	8.0	-22	-17	-21	-30	...
20	16.0	-24	12.4	-33	-18	-16	-18	-24
21	22.4	-13	17.2	...	-22	-14	-11	-13
22	25.9	-9	20.9	...	-26	-15	-9	-8
23	25.7	-7	21.0	...	-26	-15	-8	-6
24	25.6	-6	20.8	...	-24	-13	-7	-5

VK STH — NTH/CENT AMERICA

UTC	MUF	DBU	FOT	14.2	18.1	21.2	24.9	28.5
1	23.9	-10	19.8	...	-27	-15	-8	-6
2	23.1	-8	18.6	...	-22	-12	-6	-5
3	22.6	-5	18.1	-36	-14	-7	-3	-3
4	22.4	0	17.9	-22	-6	-1	1	-1
5	22.6	6	18.0	-7	3	6	5	2
6	22.5	11	17.8	7	12	12	9	4
7	22.1	15	17.9	17	18	16	11	5
8	21.3	17	16.6	23	21	17	11	3
9	20.3	13	15.5	22	17	11	2	-9
10	16.7	13	12.6	19	10	1	-12	-27
11	13.3	15	9.9	12	-1	-15	-34	...
12	10.8	15	8.1	4	-15	-34	...	...
13	9.1	8	6.8	-7	-28	...	...	...
14	8.4	-9	6.3	-12	-30	...	...	...
15	8.8	-18	6.7	-12	-24	-39	...	...
16	9.3	-28	7.0	-13	-19	-30	...	...
17	9.8	-33	7.4	-14	-16	-24	-38	...
18	9.1	...	6.9	-19	-19	-26	-40	...
19	8.3	...	6.4	-40	-40	...	...	...
20	8.2	...	6.4	...	...	...	...	...
21	11.2	...	8.3	-39	-27	-27	-34	...
22	16.8	-25	12.9	-40	-20	-15	-14	-17
23	23.4	-12	18.0	...	-26	-16	-11	-10
24	24.1	-11	19.6	...	-30	-17	-10	-7

VK WEST — NTH/CENT AMERICA

HAMADS

TRADE ADS

● SATFAX: NOAA, Meteor, GMS weather satellite picture receiving program for IBM XT/AT. Displays in 64 colours.Needs EGA colour monitor & card, and "Weather Fax" PC card. $45 + $3 postage *** RADFAX2: HF weather fax, Morse & RTTY receiving program for IBM XT/AT. Needs CGA, SSBHF, FSK/Tone decoder. Also "RF2HERC", "RF2EGA" & "RF2VGA", same as RADFAX2 but suitable for Hercules, EGA & VGA cards respectively. $35 + $3 postage *** All programs are on 5.25" OR 3.5" disk + full documentation. ONLY from M Delahunty, 42 Villiers St, New Farm 4005 QLD. Ph (07) 358 2785.

● **AMIDON** FERROMAGNETIC CORES: For all transmitter and receiver applications. Send DL size SASE for data/price to RJ & US Imports, Box 157, Mortdale NSW 2223 (no enquiries at office please ... 11 Macken St Oatley.) Agencies at: Geoff Wood Electronics, Sydney: Webb Electronics, Albury: Electronic Components, ACT: Truscott's Electronics, Melb: S Willis, Perth: Assoc TV Service, Hobart. Closed first 2 weeks May.

● Decode and print weather pictures on your computer using the Listening Post Software from FT Promotions and a suitable decoder (AEM 3500). Also decodes RTTY and Morse. Versions for Apple, Commodore 64/128 and Microbee (C64/128 no CW) _ only $36 inc p&p. Call or write to FT Promotions, PO Box 547, Rozelle NSW 2039. Ph: (02) 818 4838.

● Propagation prediction program as used by Roger Harrison in AR — two-program set provides HF propagation predictions for any two locations in the world, for any month giving freq vs time with signal strength, MUF and FOT and showing modes and elevation angles vs time. IBM and comp only — $36 inc p&p. Call or write to FT Promotions, PO Box 547, Rozelle NSW 2039. Ph: (02) 818 4838.

FOR SALE — ACT

● MORSE Training program DOTC Approved, for IBM XT/AT & Clones WANG APC, SANYO 550/555, Commodore PC. Copies $5. From VK1 Division Box 600 Canberra 2601.

FOR SALE — NSW

● ICOM IC502 50MHz 3watt Tranceiver I.G.C. 50-5MHz Coverage $160 Three 572B Triodes. Best offer contact Scott VK2JSR Ph(066) 295-127 AH

● D.S.E. 75mm CRO in as new cond $200 F.O.R. (06)2261001 R.Dell
VK2DVG Between 8am 6pm or QTHR.

● YAESU FT-ONE top condition all options installed, including fan speed control, improved NB, manuals, service extender kit - $1600 VK2AFR QTHR Ph.(02)6357179.

● AZDEN PCS-300 h/held, 3watts h/power complete with charger,stand, rubber duck $250 AEA Pakratt PK-64 v.g.cond with manual for C-64 only $350 VK2EVD 066 527160

● WILLIS u10 70cm-fm transceiver. valves, 6U7G, 4cx5000a, 813 12 BY7A, pair 6146B's, 5Z3, 6A6, OC3, 6SK7GT, 6X5GT, 5U4GB. Bird 888 50 ohm vhf dummy load 1200 watts. Ken VK2YKM QTHR, a/hrs (066)243197.

● WWII Pan adaptor, 5" crt, valves components appr good, built in p/s. pr crt's, 3BP1s best offer. Midland SWR/power meter $25. pr 872's merc vap tubes, ceramic bases, $20 ea. 2/pr 3e25/832a vhf/uhf, ceramic bases, suit linear $20 ea. back issues AR & ARA to 10 years. min order 12 copies $1 per copy. hb p/s on metal chassis, 350 volt 125ma. well filtered $25. YAESU YC-601 dig disp unit. suit FTDX100, FTDX277 & FTDX401 to FTDX505 series. $300. YAESU trcvrs. FTDX400 $300. FTDX401 $350. both sets appearance & cond good. valves ok, new drivers & finals. 1 kw linear components in steel cabinet. cannot finish due to ill health. hd trani, filter, 3 meters, 2 fans, copper tubing tank coil, new tubes, 4/RCA 808's plus 5/830b's, ceramic sockets fil chokes & hd rf choke $450 inc freight. getting started? YAESU FTDX401 & FTDX560. mint appr, recent alignment. instr books. valves & sets in good working order. spare valves at sensible prices. $425 ea inc freight. VK2IX QTHR - Ph (069)488321.

FOR SALE — VIC

● KENWOOD TS930 transceiver complete with mic and instr book mint condition - $1900.00. AEA computer patch model CP1 with mba-tor software for Commodore C64 computer, suitable for cw, rtty, amtor and ascii, with full instr - $250. MFJ ssb filter SBF2 - $25. Alf Chandler - tel (03)5895344.

● DICK SMITH 100w 2M linear, as new condition, assembled and aligned to full specs, inc manual, $195 posted VK. Roger VK3XRS. Phone (051)568291.

● ICOM IC28H 2 metre transceiver. 50 watts FM with mobile mount. microphone. 21 memory channels, manual, original carton, 18 months old mint condition, sell to licensed amateur only $540.00. Scanner - Uniden Bearcat hand held. Model UBC 200xlt. latest model. range from 66MHz to 956MHz in 10 bands, covers 2 metres and 70cm amateur bands. all vhf and uhf mobile networks, marine, air, cellular telephones etc. 200 memory channels, with charger, leather carrying case. Four months old, in mint condition, currently retailing for $599.00, urgent sale $450.00. Laptop Computer Amstrad ppc640 IBM compatible, current model in excellent condition, hardly used. 640k ram, v20 processor chip, two 9cm 720k floppy drives, includes external monitor, inbuilt modem (300/300, 1200/1200, 75/1200), carry case, manual, three way power, dos 3.3 and utilities. $975.00. Hard Disk Drive. NEC for IBM XT/AT. 10 megabvtes with controller and cables, little used in excellent condition, includes DOS 3.3 and utilities. $190.00. Floppy Disk Drive 13cm for IBM etc, little used with cable. $100. VK3UV QTHR. (03)5806424.

● Power supply 25A YAESU FP7577HD $450. Kevin VK3CKL (03)7929503 QTHR.

● HEATHKIT VTVM IM-18 technical manual, full circuit diagram. in excellent condition, $160 ono. Vince VK3AJO QTHR (03)8723505. after 6pm week nights.

● YAESU FT 757 gx transceiver, full coverage receiver. scanning microphone in good condition $1300 o.n.o. tel (051)992811.

● TANDY Realistic Pro 2022 200 ch. scanner as new only 20min use too complicated cost $549.95. Sell $400. David L30259 QTHR (03)3703589.

● AZDEN PCS 4000 2 meter mobile transceiver 5 or 25w 16 memories reverse back lit dial no mods new condition inst book carton $380 Alf VK3EJ AH(03)8772983 BH (03)8733777.

● KENWOOD TS440S with mic, service manual, gc $1750. YAESU FT690RMK1 with mic, carry case, mobile bracket, and matching 1OW FL6010 linear, gc $500 Michael, VK3EMJ QTHR A/H (03)5319954.

● EQUIPMENT racks. fully drilled and tapped. accept standard 19inch panels. 1870mm high. military specification. fully enclosed. ventilated and shielded. superior quality. $200 each. John VK3ZA Ph (055)772428.

FOR SALE — QLD

● YAESU FT7 transceiver with mike - manual and pwr cable. excellent condition. original owner. with carton and packing $365 Chas VK4CHO (07)3417153.

● AMIGA amateur radio related programmes. 4 disks posted $25 Herb VK4KM QTHR (071)644382.

● TRAMP 128 v1.9 terminal prog. for Commodore 128 $5 posted. Herb VK4KM. QTHR (071)644382

● HAMPACK 111 plugin rtty cw asc11 card for Apple 2 plus all speeds & shifts software manual & cables other discs $200 ono (071)284110.

● KENWOOD TS830S txvr and remote VFO230 vgc with manuals and cartons. overhalved by accredited Kenwood dealer. $950 Ron VK4MBJ QTHR (070)921181 a/h.

● IC502 6 meter SSB portable transceiver, good condition, some modifications. best offer Geoff VK4KGE QTHR (071)621499 bh (071)621499 ah.

FOR SALE — SA

● YAESU FT227R memorizer 2 metre transceiver with

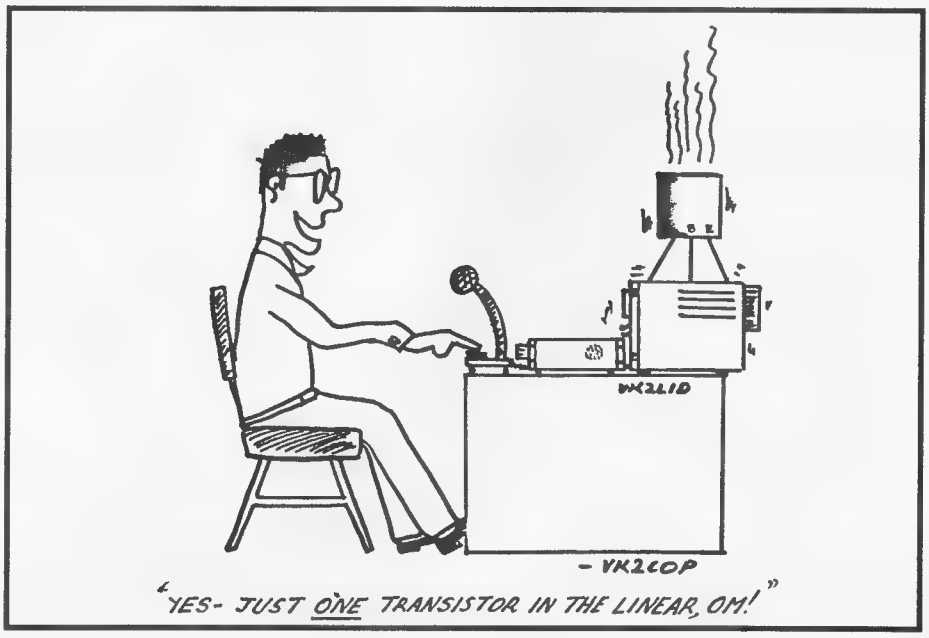

handbook mic $230.00 VK5BVJ QTHR (087)380000.

FOR SALE — TAS

● YAESU FL2100B linear amplifier. very good condition. $800 o.n.o. Ian VK7JY Ph (003)272011.
● JRC - JST 125 transceiver 160-10 meters inc warc, & gen.cov.rec. 77 memories commercial quality excellent condition $1950.00 inc mic & boxes etc. JRC-NVA 88 matching ext. spkr $145.00 new. Tandy HTX100 - 10 mtr ssb/cw 25w output mobile transceiver new, unused $450.00. VK7AN (003)317914.

WANTED — NSW

● ICOM ICU51A uhf all mode transc in good cond. contact Scott VK2JSR Ph (066)295127 a.h.
● AWA MRT25A (or 25) low band for spares only price etc to VK2ED QTHR (043)284106.

WANTED — VIC

● 15M YAGI monobander. must be in good condition VK3CUI Denis (03)8746517.
● CIRCUIT A.W.A. modulated oscillator type 3J6726 150 kc. - 30mc. uses 2 only IQ5-GT valves all costs reimbursed. Ken VK3ZFI QTHR (03)5805347.
● ICOM IC21A 2m,fm xcvr. also KENWOOD SP930/940 speaker. Ron VK30M QTHR Ph (059)443019.
● KENWOOD xcvr TS130V (victor) low pwr version TS130S Reg VK3CCE QTHR (03)5091720.

WANTED — QLD

● 5PIN ceramic valve sockets for 4-125 valves qty price VK4CB QTHR (07)2026566.

WANTED — WA

● HAMSOFT cartridge for amtor by Kantronics, to run on a C64C or the program on disk. VK6SY QTHR.
● UNIDEN 2020 front end or complete 2020 txvr with working front end. Laurie VK6NAO (09)3872140.

Support the WIA in order to protect Amateur Radio frequencies at WARC 92

THIS SPACE COULD BE EARNING YOU MONEY!

ADVERTISING RATES AVAILABLE FROM PO BOX 300, CAULFIELD SOUTH, 3162

HAMADS

Please Note: If you are advertising items For Sale and Wanted please use a separate form for each. Include all details; eg Name, Address, Telephone Number (and STD code), on both forms. Please print copy for your Hamad as clearly as possible.
*Eight lines free to all WIA members, ninth line for name and address Commercial rates apply for non—members. Please enclosed a mailing label from this magazine with your Hamad.
*Deceased Estates: The full Hamad will appear in AR, even if the ad is not fully radio equipment.
*Copy typed or in block letters to PO Box 300, Caulfield South, Vic 3162, by the deadline as indicated on page 1 of each issue.

❑ Miscellaneous
❑ For Sale
❑ Wanted

Name: .....

Call Sign: .....

Address: .....

.....

*QTHR means address is correct as set out in the WIA current Call Book.
*Please enclose a self addressed stamped envelope if an acknowledgement is required that the Hamad has been received.
Ordinary Hamads submitted from members who are deemed to be in general electronics retail and wholesale distributive trades should be certified as referring only to private articles not being re—sold for merchandising purposes.
Conditions for commercial advertising are as follows: $22.50 for four lines, plus $2.00 per line (or part thereof) Minimum charge — $22.50 pre—payable.

State: .....

Solution to Morseword No 39

	1	2	3	4	5	6	7	8	9	10
1	·	·	·	—	·	—	—	—	·	·
2	·	—	·	—	—	—	—	·	·	·
3	·	—	·	·	·	·	—	·	·	·
4	·	·	—	·	·	·	·	—	·	·
5	·	·	·	·	·	—	·	—	·	—
6	·	·	·	·	—	·	·	—	·	—
7	·	·	—	—	·	—	—	·	·	·
8	—	—	·	—	—	—	·	·	·	·
9	—	·	—	·	·	·	—	·	·	—
10	·	·	·	—	·	·	·	·	—	—

Across: 1 stage 2 rob 3 lib 4 fire 5 hart 6 saint 7 impi 8 goes 9 kilt 10 view

Down: 1 hip 2 peel 3 Vic 4 giant 5 real 6 merge 7 oven 8 does 9 hist 10 swim

TRADE PRACTICES ACT
It is impossible for us to ensure the advertisements submitted for publication comply with the Trade Practices Act 1974. Therefore advertisers and advertising agents will appreciate the absolute need for themselves to ensure that, the provisions of the Act are complied with **strictly.**

VICTORIAN CONSUMER AFFAIRS ACT
All advertisers are advised that advertisements containing only a PO Box number as the address cannot be accepted without the addition of the business address of the box-holder or seller of the goods.

TYPESETTING : Redfords Media, 25 Glenferrie Rd, Malvern 3144, Tel: (03) 500 0377

PRINTING: Industrial Printing, Richmond

MAIL DISTRIBUTION: Polk Mailing Co., PO Box 140, Collingwood, Vic. 3066, Tel:(03) 417 5161

The opinions expressed in this publication do not necessarily reflect the official view of the WIA, and the WIA cannot be held responsible for incorrect information published.

ADVERTISER'S INDEX

ATN Antennas 35
Dick Smith Electronics 28, 29
Electronics Australia ..... IBC
Emona Instruments 1
Icom Australia ..... OBC,
Kenwood Electronics Aust. ..... IFC
Magpubs 5
Moonraker Australia 17
Research Engineering Co. 51
WIA NSW Division 7
TRADE ADS
RJ & US Imports 54
M Delahunty 54
FT Promotions 54

HOW TO JOIN THE WIA

Fill out the following form and send to:

The Membership Secretary
Wireless Institute of Australia
PO Box 300
Caulfield South, Vic 3162

I wish to obtain further information about the WIA.

Mr, Mrs, Miss, Ms: .....

Call Sign (if applicable): .....

Address: .....

.....

State and Postcode: .....

Radio Amateurs: Have you checked out EA lately?

No doubt most radio amateurs are aware that *Electronics Australia* is by far this country's largest-selling electronics magazine, as well as being its oldest (we began way back in 1922, as *Wireless Weekly*). But have you looked inside the magazine lately?

Now it's bigger and better than ever, because our leading competitor *ETI* has been merged with us, to form *Electronics Australia with ETI* – the biggest, brightest and most informative electronics magazine, bar none.

You'll now find lots of new 'departments' in the magazine, including Solid State Update (with news of new semiconductor devices), Silicon Valley Update (news from the USA) and What's New in Entertainment Electronics. Plus all of your old favourites like Forum, The Serviceman, Circuit and Design Ideas and so on. And of course plenty of 'meaty' technical articles and contruction projects.

INCLUDED IN OUR JUNE ISSUE:

70CM CONVERTER

Here's an easy to build 70cm converter design for our 6m NBFM Receiver. It's all on one PCB, with microstriplines for straightforward front-end tuning.

THE RISE & FALL OF THERMIONIC VALVES – 2

Neville Williams concludes his look at the role of valves in building the radio and electronics industries. This month he looks at AC heating, multi-grid tubes and what it was like to work at AWA's valve factory.

CHOOSING A DMM

There are so many digital multimeters available nowadays that choosing the best one for *your* job can be far from easy. Jim Rowe explains how they work, and what the specs *really* mean.

What about *amateur radio* projects? Well, as you can see there are more of these than before – but we're very interested in publishing more. So if YOU have developed an exciting amateur radio project, contact Jim Rowe by writing to him at EA, 180 Bourke Road, Alexandria 2015. Or phone him on (02) 693 6620, to discuss the possibility of publishing it as a contributed article. As well as earning a fee, you'll also be helping to boost interest in amateur radio!

Take a look at the new, bigger and brighter *Electronics Australia with ETI* – on sale at your newsagent at the beginning of each month. Or subscribe now, by phoning (02) 693 9517 or 693 9515.

Electronics Australia WITH ETI

Australia's Top Selling Electronics Magazine

ICOM

The smaller we get, the better we get!

ICOM's amazing new mini FM Handhelds

The minute you see and hold one of the Icom "S Series" mini handhelds you'll agree with our thought that "bigger is not always better and smaller is not always less"

By reducing the size of our product, maintaining high standards of quality and production and constantly improving our range, Icom's business continues to grow. So, the smaller we get, the better we get.

IC-2SAT, IC-4SAT, IC-24AT
Overall, Icom's family of tiny miracles, the 2SAT, 4SAT and 24AT give the Handheld enthusiast ease of operation through the convenient, multi-function keyboard. Delivering a full 5W output (at 12V) they feature clear, backlit function displays, splash resistant design and durable construction for outdoor use. One of these models is bound to suit your application, camping, skiing, in the field or vehicle. Use with built-in, rechargeable NiCd batteries (IC-2SAT, IC-4SAT only) or external power supply without having to use DC-DC converters, just the optional cigarette lighter cable or mini. power cable.

IC-2SA
A super multi-function hand held with strong appeal for veterans, the 2SA is also the perfect way for newly licenced Amateurs to get started. This 144 MHz FM transceiver delivers 5W output (at 12V) with the optional BP-85 battery-pack, 40 memory channels, automatic power saver, LCD readout, operation from battery or external 12 volt DC supply. A PTT lockout switch is provided to prevent accidental transmissions. Amazingly its tremendous versatility and wide variety of functions are simply controlled by just six switches and three controls. An interesting and detailed colour brochure will be sent to you on request – call now for the name of your nearest stockist.

IC-24AT
Two Radios in one?

Would you believe a full dual-bander in the palm of your hand? Yes, full crossband duplex with 40 independent (simplex, 20 duplex) memory and 2 call channels, 5 watts out put from 12 volts direct power!
With all its features, you'd think the 24-AT would be quite a handful – and it is – almost. Even with its battery pack it only weighs 340gm but still gives you 6 scan functions, priority watch and built-in clock with a timer function.
We know you can't wait to find out more about our latest triumph in design and miniaturisation, so call us now for a free colour brochure giving full details on the 24AT and ask for the name of your nearest stockist.

For further information call Icom free on 008 338 915

Melbourne callers (03) 529 7582 Icom Australia Pty. Ltd., 7 Duke Street, Windsor 3181.
Icom Australia's warranty is only applicable to products purchased from their authorised Australian Dealers.

ICOM

■ AMATEUR ■ MARINE ■ LAND-MOBILE ■ AVIATION ■ CB ■ AMATEUR ■ MARINE ■ LAND-MOBILE ■ AVIATION ■ CB ■ AMATEUR ■ MARINE ■ LAND-MOBILE ■

Please rush to me your brochure on the ☐ 2SA ☐ 2SAT ☐ 4SAT ☐ 24AT and the name of my nearest Icom stockist.

SEND TO: Freepost 15, Icom Australia Pty Ltd, Windsor, 3181 (no stamp required).

Mr., Mrs., Ms. ..... Company ..... Title .....

Address ..... Suburb .....

City ..... Post Code ..... Phone No. ..... NCAA 4641 AR

■ AMATEUR ■ MARINE ■ LAND-MOBILE ■ AVIATION ■ CB ■ AMATEUR ■ MARINE ■ LAND-MOBILE ■ AVIATION ■ CB ■ AMATEUR ■ MARINE ■ LAND-MOBILE ■

VOL 58 NO 6 JUNE 1990